WIRING DIAGRAM Area 51

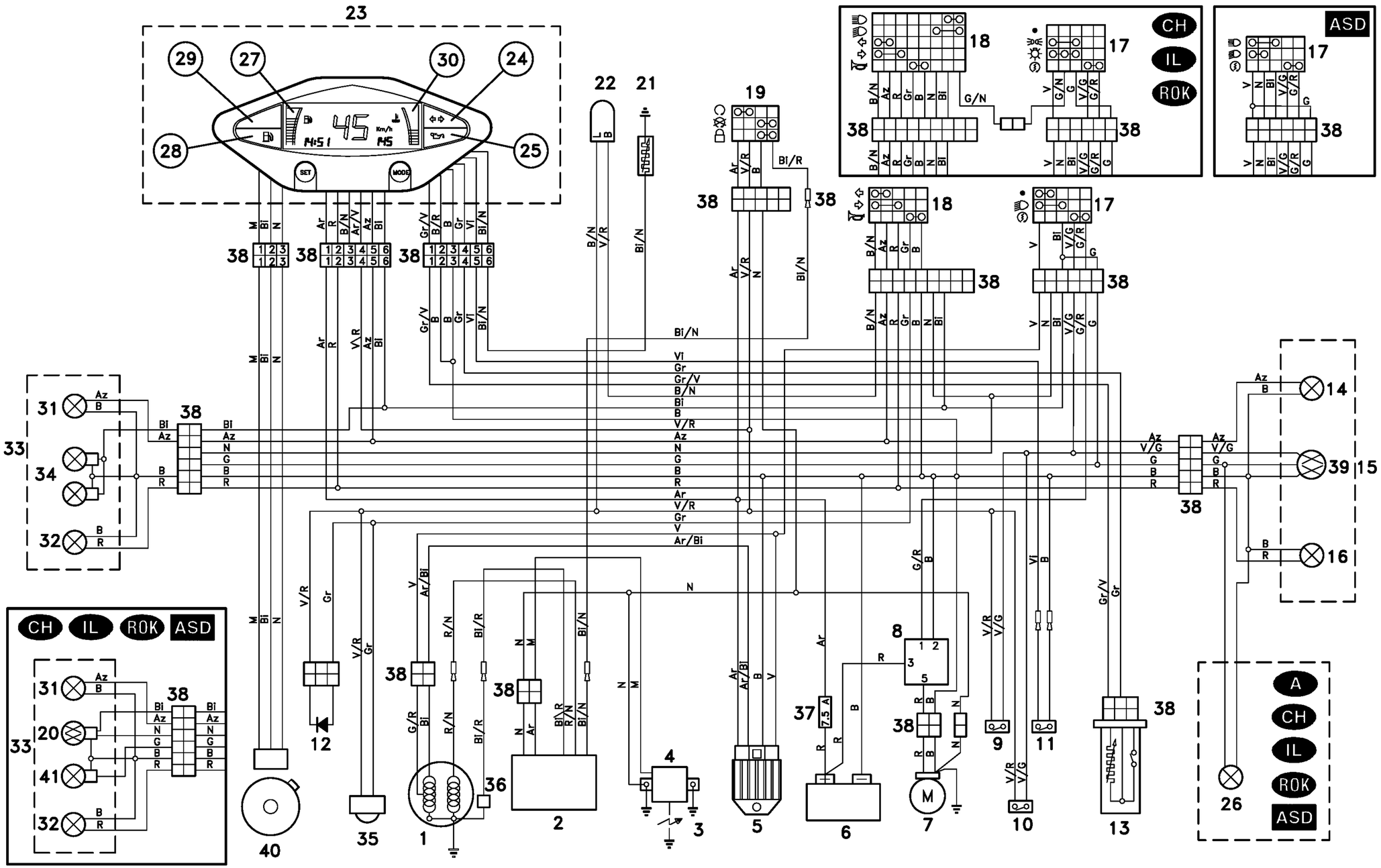

WIRING DIAGRAM KEY Area 51

1) Generator
2) CDI
3) Spark plug
4) HT coil
5) Voltage regulator
6) Battery
7) Starter
8) Start relay
9) Front stoplight switch
10) Rear stoplight switch
11) 2 stroke oil reserve switch
12) Diode
13) Fuel level sensor
14) Rear right direction indicator
15) Rear light
16) Rear left direction indicator
17) Right dimmer switch
18) Left dimmer switch
19) Ignition switch/steering lock
20) Low/high beam bulb
21) Coolant thermistor
22) Blinking
23) Dashboard
24) Direction indicator warning light
25) 2 stroke oil reserve warning light
26) Number plate light
27) Fuel level indicator
28) Low fuel warning light
29) Low beam warning light
29) High beam warning light CH IL ROK ASD
30) Coolant temperature indicator
31) Front right direction indicator
32) Front left direction indicator
33) Front parking light
34) Low beam bulbs
35) Horn
36) Pick up
37) Fuse
38) Multiple connectors
39) Rear parking light / stoplight bulb
40) Speed sensor
41) Front parking light

CABLE COLOURS

Ar Orange
Az Light blue
B Blue
Bi White
G Yellow
Gr Grey
M Brown
N Black
R Red
V Green
Vi Violet

ASD automatic light switching version (Automatic Switch-on Device)
OPT optional
catalytic version

VERSION:

I	Italy	NL	Holland	BM	Bermuda
UK	United Kingdom	CH	Switzerland	USA	United States of America
A	Austria	DK	Denmark	AUS	Australia
P	Portugal	J	Japan	BR	Brazil
SF	Finland	SGP	Singapore	RSA	South Africa
B	Belgium	PL	Poland	NZ	New Zealand
D	Germany	IL	Israel	CDN	Canada
F	France	ROK	South Korea	HR	Hungary
E	Spain	MAL	Malaysia	SLO	Slovenia
GR	Greece	RCH	Chile		