BRIXTON
MOTORCYCLES

Model BX125 Motorcycle

Service Manual

ROHENTWURF/ DRAFT

Contents

BBBB

Preface

The service manual contains descriptions of maintenance essentials on BX125 motorcycle.

Service data include attentions that shall be paid on all the maintenance operations in the service manual. Please read the manual carefully before operation.

Check and adjustment contains statements on the main points of inspection and adjustment, safety of the vehicle, maintenance means of each component’s performance. This shall be implemented from the time of periodical inspection.

The parts after Part 1 demonstrate disassembly, assembly and main points of inspection of engine, finished motorcycle, engine and other components.

System diagrams, disassembly drawings, maintenance, fault diagnosis and explanations are presented before each part when compiled.

Notes:

If patterns or structures of the motorcycles change, or differences exist between pictures, drawings, instructions or others and physical products, please take the later as the standard. The product is subject to change without further notice.

Service Data

General Safety **Maintenance Regulation**

Specification Sheet **Fault Diagnosis**

General Safety

Carbon monoxide (CO)

When it is necessary to start the engine, please make sure the workplace is well ventilated. You shall never run the engine in an enclosed place.

Attentions

Gas exhausted from the motorcycle contains toxic carbon monoxide, which may lead to loss of consciousness and even death.

It is necessary to run the engine in an open area. If the engine is run in an enclosed site, ventilation system shall be used.

Gasoline

Work in well-ventilated site. Fire and smoking are strictly forbidden in working sites or gasoline storage places.

Battery

Battery electrolyte contains sulfuric acid, so do not let the eyes, skin, clothes infected with electrolyte. Once the skin, clothes infected with electrolyte, thoroughly rinse with water; if infected eyes, you should immediately go to hospital.

Special Tools

Correctly select the common tools and special tools when assembling or disassembling parts, and the special tools shall not be alternated by common tools. In addition, the force should be appropriate to avoid damaging parts.

High-temperature Burn

Pay attention to your safety during maintenance. Carefully, do not be burnt by the ghi-temperature engine, exhaust pipe, muffler and other hot parts. You should take care of each other in case of cooperation with others.

Maintenance Regulations

While repairing and servicing, try to use tools of metric system as possible as you can. Incorrect tools may damage the motorcycle.

Before take down or open protecting plate for maintenance work, please clean the dirt on external surface of the component or the assembly to prevent the dirt from falling into the engine, chassis or braking system.

After disassembly and before measuring friction, please clean the components and purge with air compressor.

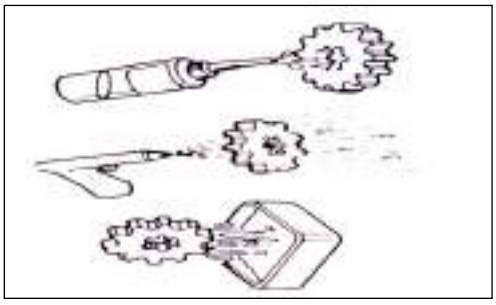

Do not bend or distort during operation to avoid difficult operation or earlier damage.

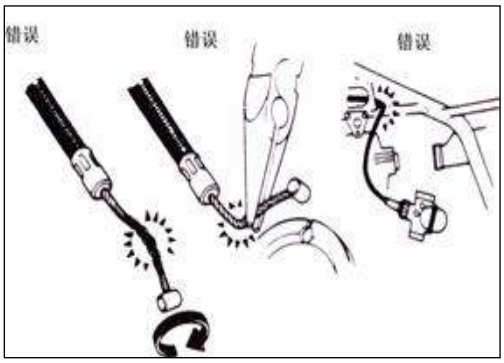

Plastic parts may deteriorate due to aging, which are apt to be damaged by solvent or oil. Check before re-installation and replace if necessary.

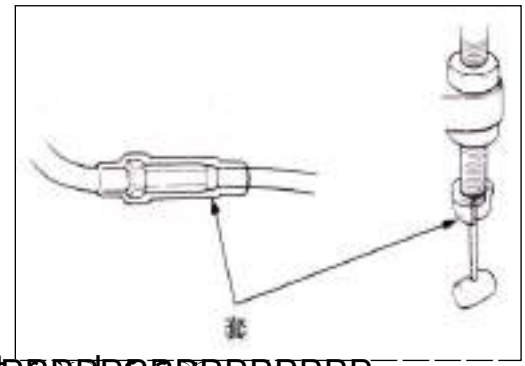

While removing a component with many assemblies, do from outside to inside. Loosen firstly smaller assemblies.

For the complicated assemblies, such as gearbox, keep them in a proper assembling order for the sake of easy assembly later.

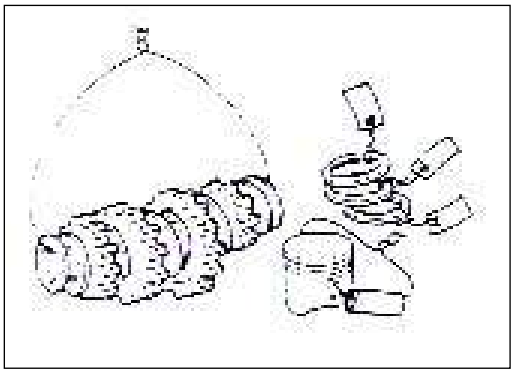

Pay special attention to the key fitting position before disassembly. The components that are not used any more shall be replaced on time before disassembly.

Length of bolts and screws are different for assemblies and protecting plates. They shall be installed at correct positions. If confused, just put the bolt inside the hole and see if it matches.

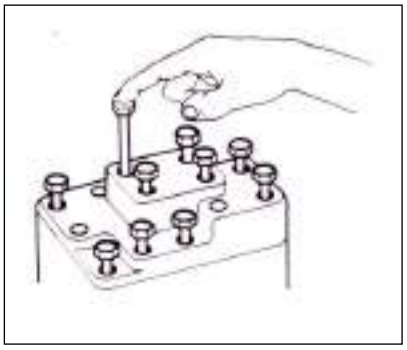

Fill lubricating grease into the groove during oil seal installation. Check if the oil seal is smooth and if it is possible to be damaged when installed.

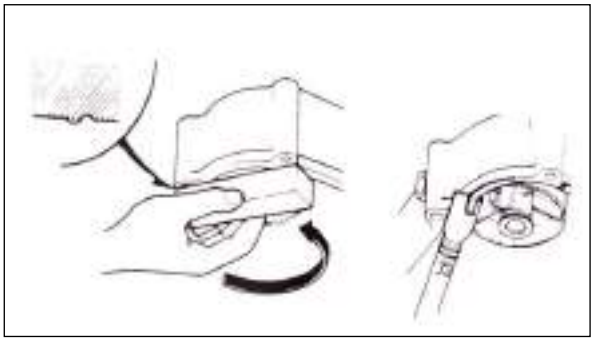

Installation of rubber hose (fuel, vacuum, or coolant): insert its end into bottom of connector so that there is enough room for the hose clamp to grip the connector. Install the rubber or plastic dustproof boot back to its originally designed position.

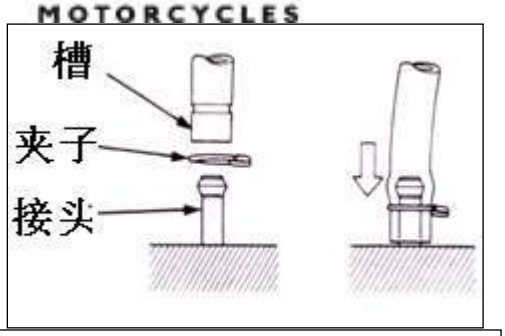

Disassembly of ball bearing: use a tool to push against one or two (inner and external) bearing races. If the force works only on one bearing race (whatever inner or external), the bearing may be damaged when disassembled and it must be replaced.

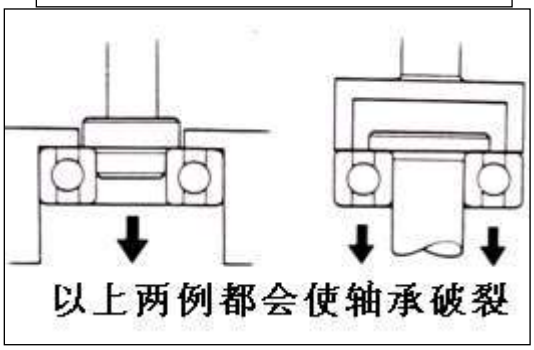

Specifications (BX125)

	Model		BX125
	Overall Length(mm)		2020
	Overall Width(mm)		910
	Overall height(mm)		1105
	Wheelbase(mm)		1320
	Weight (kg)	**Front shaft**	58kg
		Rear shaft	76kg
		Total	134kg
Tire Spec.	Cover tire of the front wheel		
	100/90-18		
	Cover tire of the rear wheel		
	120/80-17		
Drive Train	Clutch type		Wet multi-plate friction type
	Gearshift pattern		Manual
	Transmission		Chain drive
Electricals	Battery capacity/type		12V-10AH/ lead-acid type
	Generator type		permanent magnet AC motor
	Spark plug		D8RTC
	Spark plug stroke		0.6-0.8mm
	Ignition type		ECU

Engine	**Engine type**	157FMI-C
	Fuel	93# unleaded gasoline
	Number of cylinders	1
	Bore*stroke	57.3 mm *48.4 mm
	Total Displacement	124.8
	Starting mode	Electric
	Cooling mode	Air cooling
	Lubricating mode	Combined force splash
	Air cleaner	Paper - element
	Fuel tank capacity	14L
Performance	Max. speed	101 km/h
	Climbing capacity	Maximum climbing angle should not be less than 20 degrees
	Idle speed-rpm	1500± 100rpm/min
	Max. torque	11.4N.m/7000r/min
	Max. power	8.3KW/ 8500 r/min
	Compression ratio	9.3:1
Brake	Diameter of front brake disc	φ276mm
	Diameter of rear brake disc	φ220mm

BX125

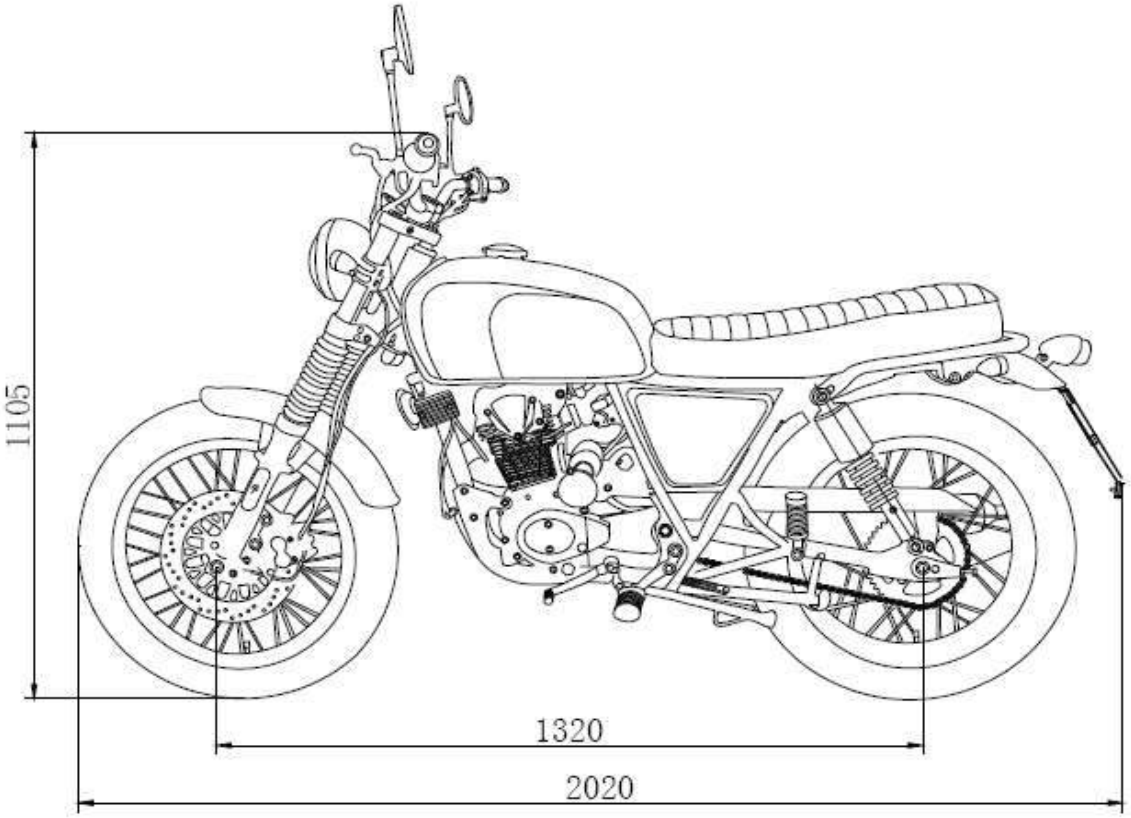

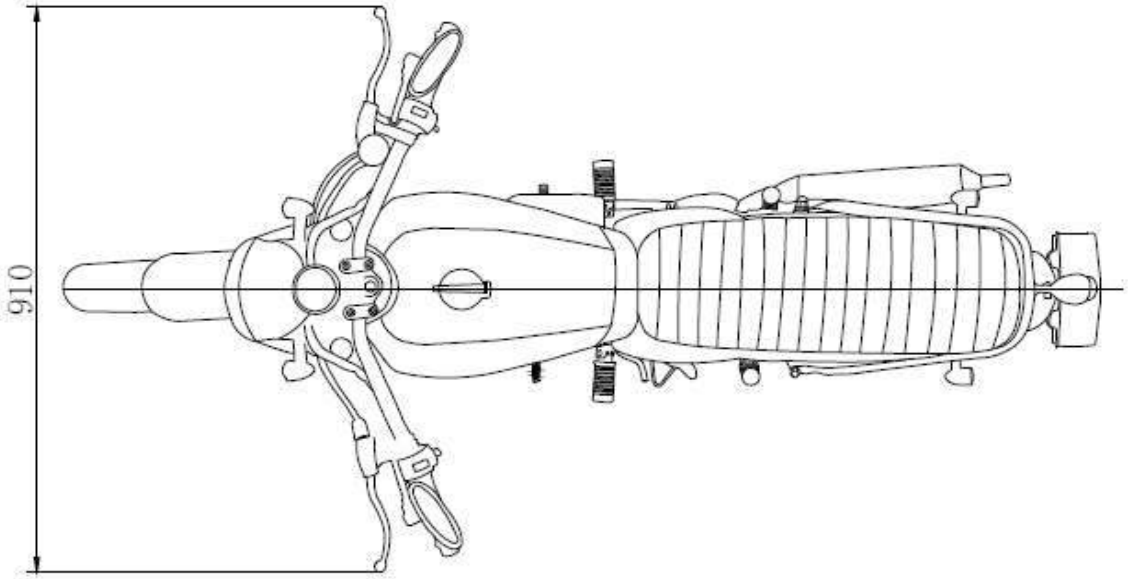

Fault Diagnosis

Hard to Start or Unable to Be Started

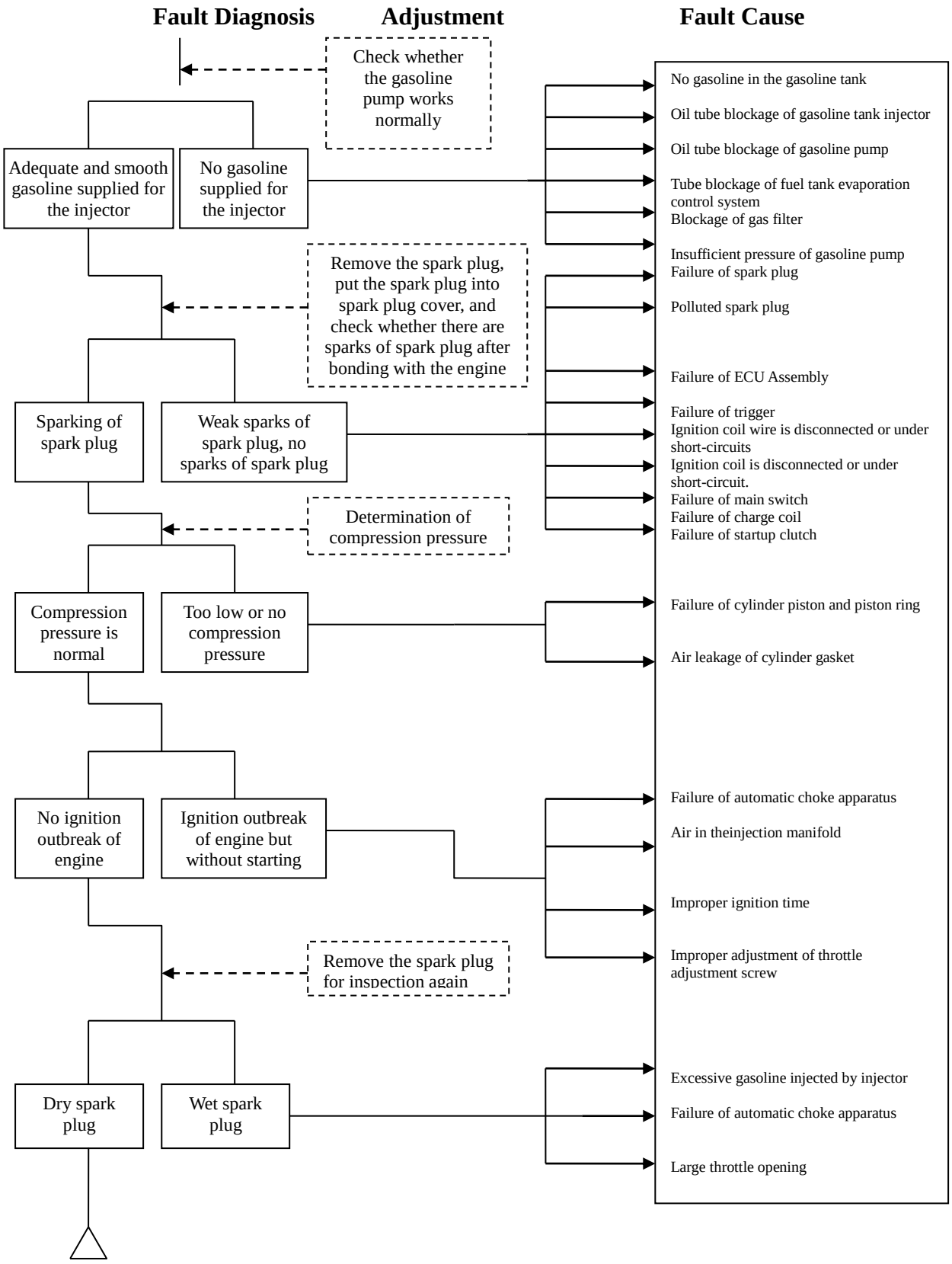

Inflexible rotation (low revolutions or powerless)

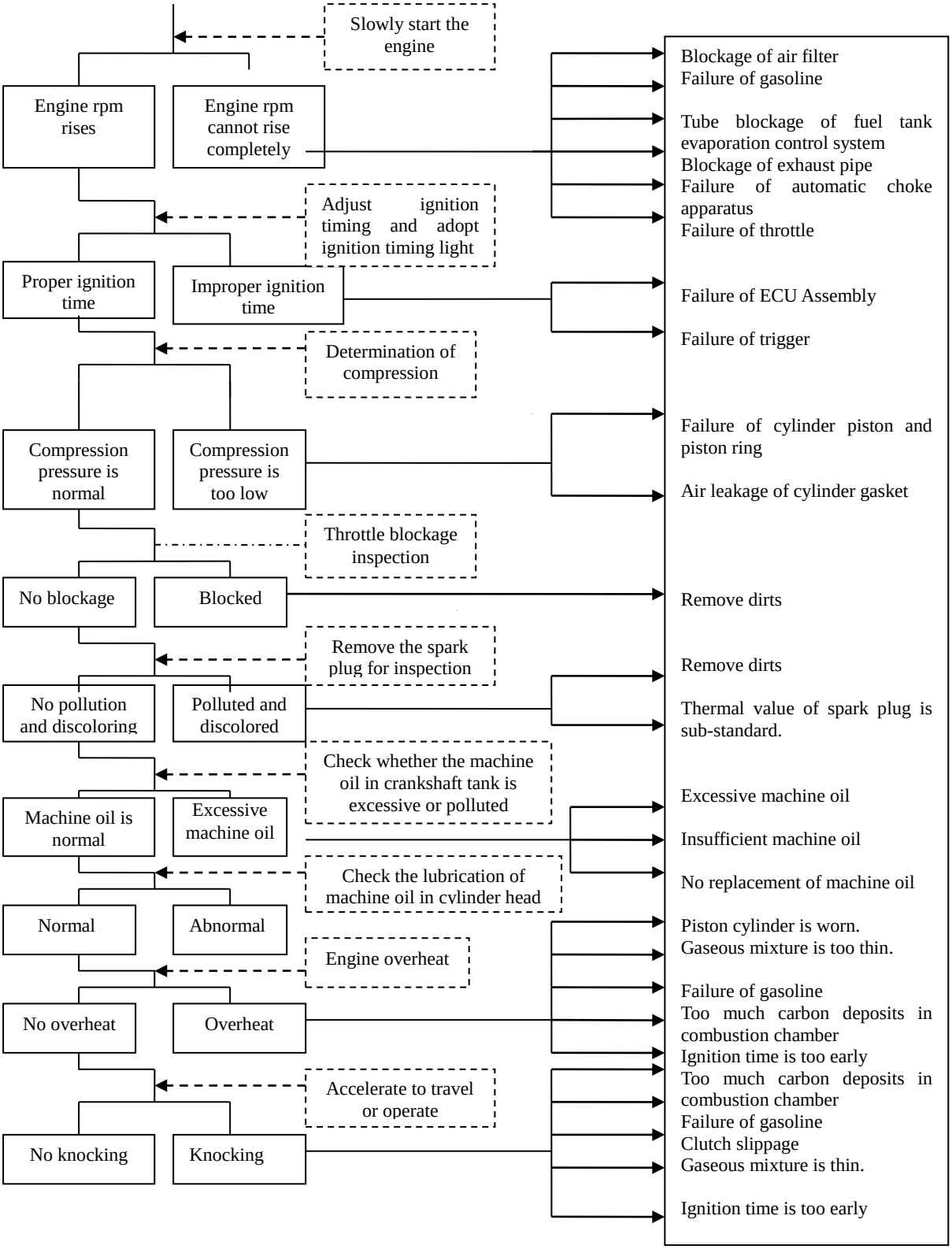

Inflexible rotation (especially low-speed)

Fault Diagnosis	Adjustment	Fault Cause

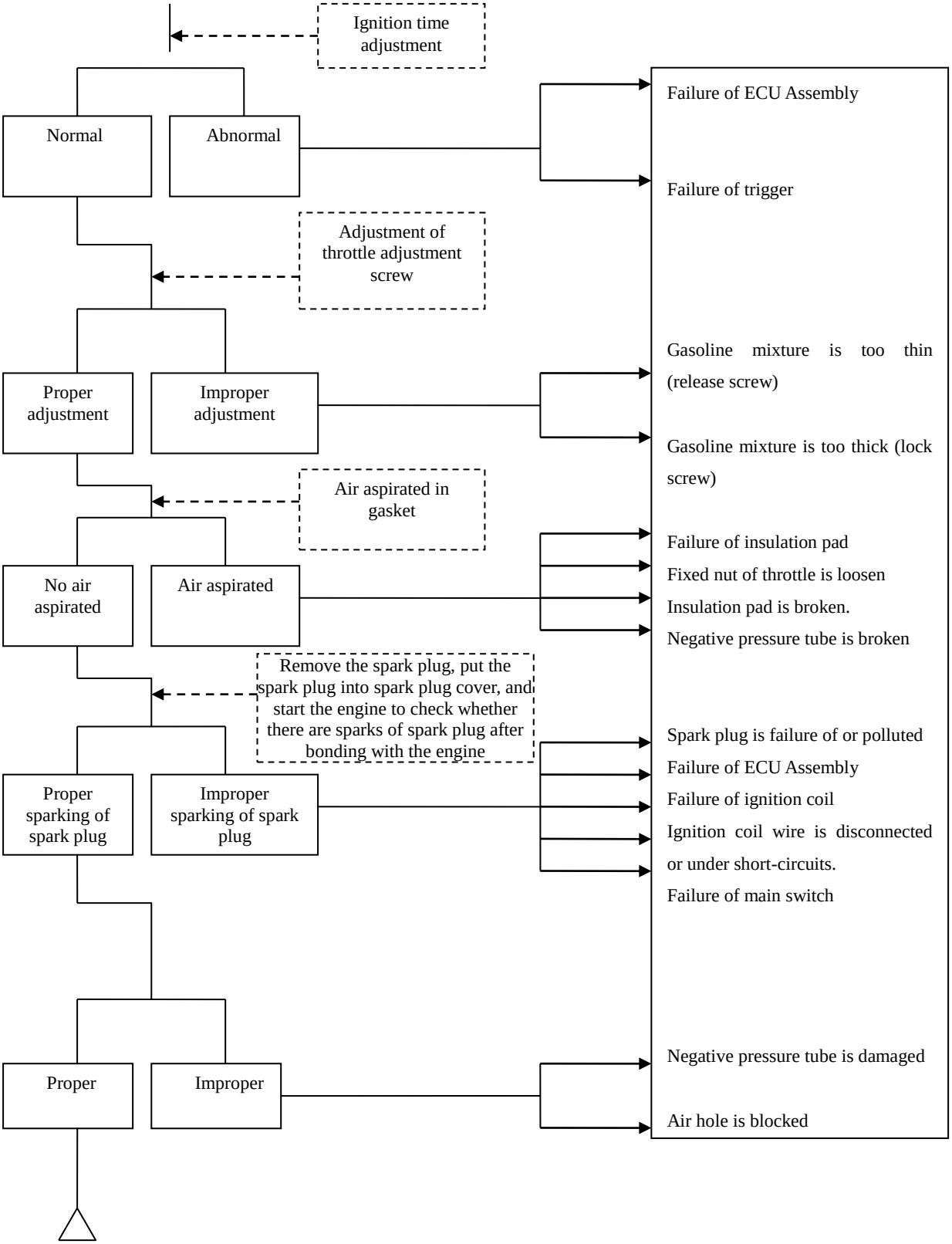

Inflexible rotation (high-speed)

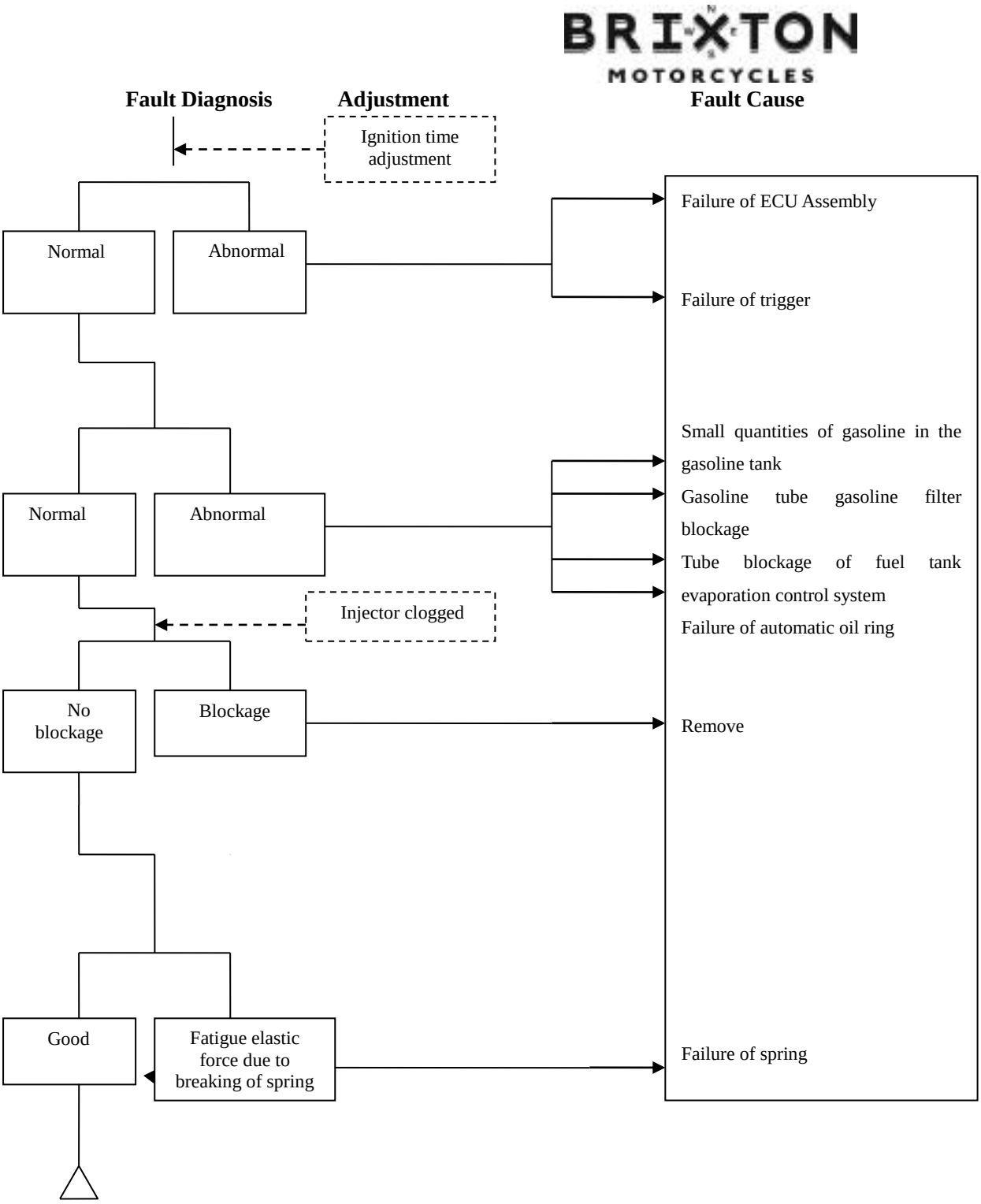
Fault Diagnosis
Adjustment
Fault Cause
Ignition time adjustment
Normal
Abnormal
Failure of ECU Assembly
Failure of trigger
Normal
Abnormal
Small quantities of gasoline in the gasoline tank
Gasoline tube gasoline filter blockage
Tube blockage of fuel tank evaporation control system
Failure of automatic oil ring
Injector clogged
No blockage
Blockage
Remove
Good
Fatigue elastic force due to breaking of spring
Failure of spring

Failure of charging (battery overdischarge or overcharge)

Fault Diagnosis **Adjustment** **Fault Cause**

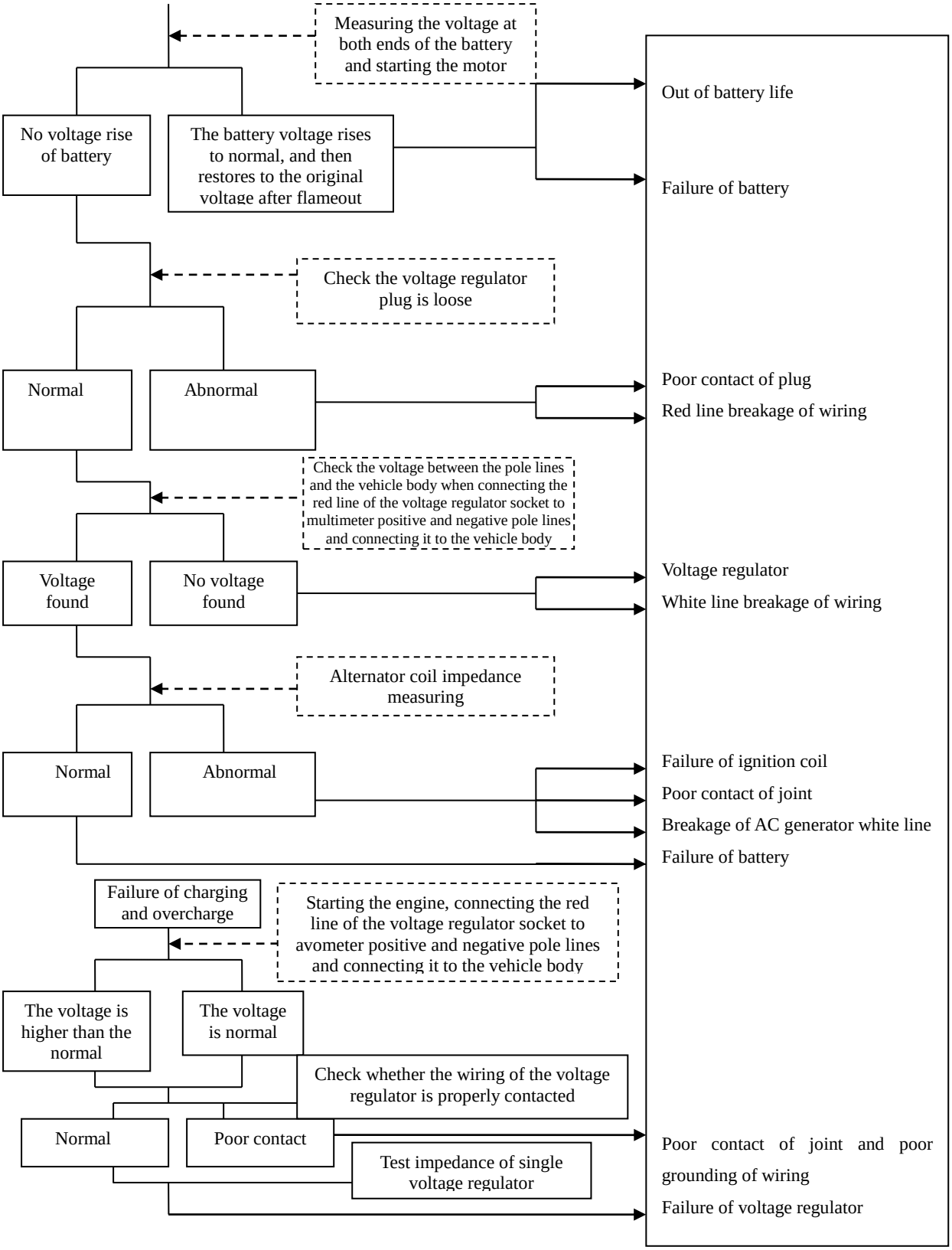

No sparking of spark plug

Fault Diagnosis **Adjustment** **Fault Cause**

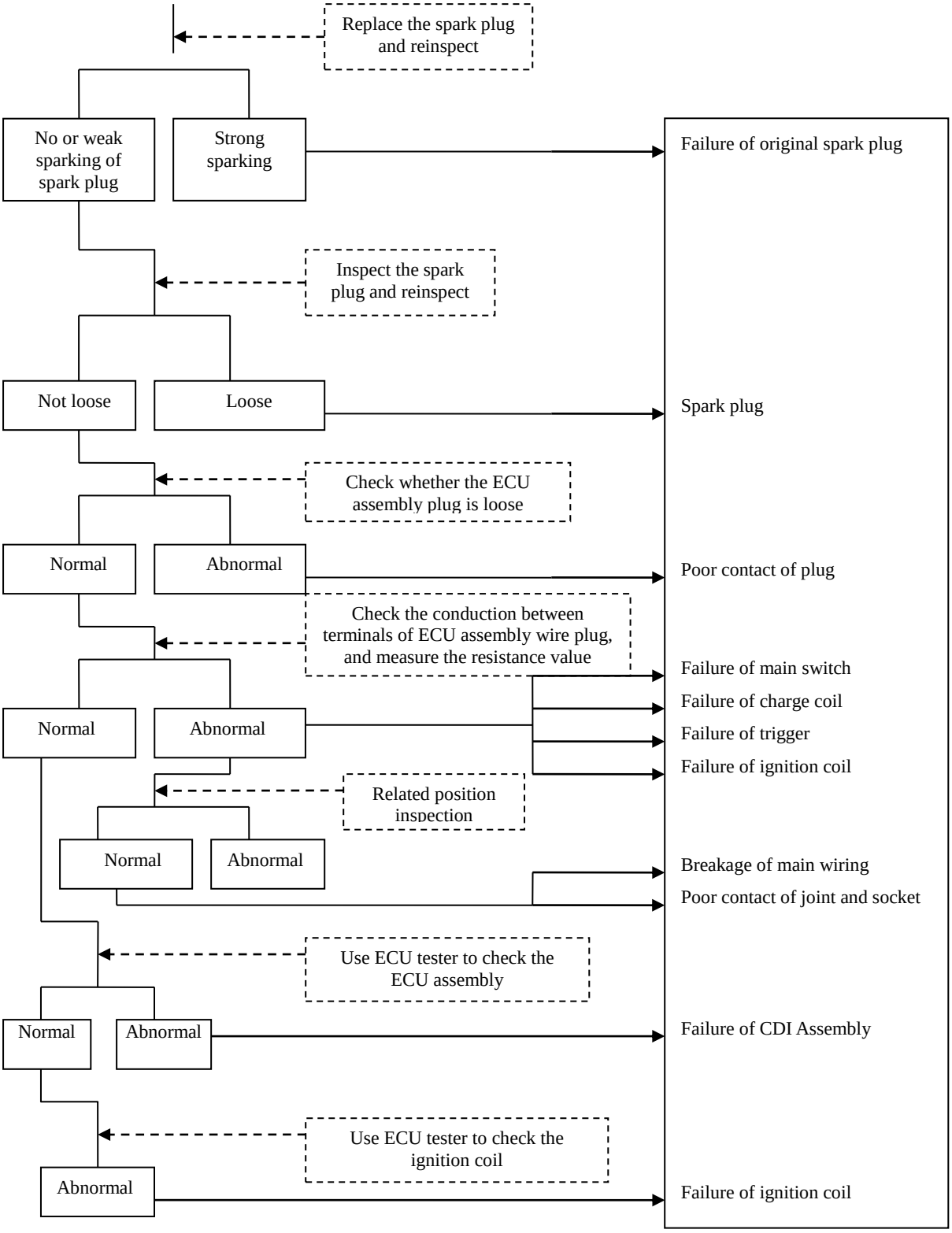

Inspection/Adjustment

Service data

Periodic maintenance schedule chart

Engine oil/ oil screen

Fuel filter

Inspection/adjustment of throttle cable

Air cleaner

Spark plug

Battery

Trottle

Cylinder pressure

Drive chain

Front/rear brake stroke

Wearing of front/rear brake shoe

Headlamp

clutch

Front/rear suspension system

Bolt/nut/fasteners

Wheel rim/tire

Tire specification

Steering stem bearing and handlebar fixation

Basic Data

General Precautions

! **Warning!**

Before running the engine, please make sure if the workplace in is well ventilated. You shall never run the engine in an enclosed site. Gas exhausted from the motorcycle contains carbon monoxide, which may lead to loss of consciousness and even death.

Under certain conditions, gasoline is highly volatile. Work in well-ventilated site. Fire and smoking are strictly forbidden in working sites or gasoline storage places.

Frame

Stroke of front brake handle		10-20mm		Stroke of rear brake pedal	10-20mm	
Pneumatic pressure unit of tire: Kpa		BX125	Front wheel spec.	100/90-18	Front wheel pneumatic pressure	225kpa
			Rear wheel spec.	120/80-17	Rear wheel pneumatic pressure	225kpa
Torque	Front wheel shaft nut	75-85 N·m		Rear wheel shaft nut	75-85 N·m	

Periodic maintenance schedule form

	Mileage and interval / Items	300 KM	1000 KM	4000 KM	8000 KM	12000 KM	16000 KM	Tools
		New Vehicle	One month	three months	Six months	Twelve months	Fifteen months	
*	Air cleaner	I		C	C	R	C	Common tool
*	Gasoline filter	I		C	C	R	C	Common tool
*	Engine oil filter	C	C	C	C	C	C	Common tool
	Engine oil replacement	R	Every 5000KM: R					Common tool
	Tire pressure	I	I	I	I	I	I	Tire gauge, air inflator
	Battery inspection	I	I	I	I	I	I	Densimeter, multimeter
	Actuating stroke inspection	I	I	I	I	I	I	Common tool
	Inspection of steering handle bar looseness	I			I	I	I	Common tool
	Shock absorber actuating inspection	I			I	I	I	Common tool
	Inspection of looseness of bolts at all positions	I	I	I	I	I	I	Torque wrench
	Check leakage of gearbox	I	I	I	I	I	I	Common tool
*	Spark plug inspection and replacement	I		I	R	I	I	Common tool
*	Replacement of	I	Every 5000KM: R					Common tool

	gearbox oil							
	Lubrication of all the places on the vehicle				L	L	L	Lubricant injector
	Exhaust pipe	I	I	I	I	I	I	Common tool
*	Ignition timing	I	I	I	I	I	I	Timing light
*	Throttle	A	I	Every 10000km: I				Tachometer, CO HC analyzer
*	Idle exhaust gas inspection	A	I	A	A	A	A	
*	Throttle inspection	I		I	I	I	I	Common tool
	Fuel hose inspection	I		I	I	I	I	Common tool
	Lamps, instrument and electric apparatus	I	I	I	I	I	I	Visual multimeter
	Main stand and side stand	I			I	I	I	Common tool
	Shock absorber			I	I	I	I	Common tool
*	Torque of engine bolt	I		I	I	I	I	Torque wrench

Expected Inspection

1	Ignition system—-perform maintenance inspection on obvious and continuous ignition malfunctions, engine on fire, overheated back burning and others.
2	Carbon deposit removal—-obvious underpower, get rid of carbon deposited at cylinder head, piston head and air exhaust system.
3	Piston and cylinder—-When cylinder is over worn or stuck, please replace it.

Please go to your local KSR periodically for inspection and adjustment to keep your vehicle in best conditions.

In above table, monthly 1000km travel is employed as reference.

I— Inspect A—Adjust R—Replace C—Clean L—Lubricate

Notes:

1. "*" for items involved in exhaust gas, which meets regulations of Local Environmental Protection Agency. Normal maintenance shall be performed according to specifications on the user's manual; unauthorized repair and adjustment are forbidden. We will not be responsible for the results.

2. You shall clean more frequently the air cleaner to extend its service life when your motorcycle is used on sand-gravel roads or in severely polluted environment.
3. More frequent servicing may be required when the motorcycle is often driven at a high speed or travels a long distance.

Engine oil/Oil filter

Engine oil level

Attentions

- Motorcycle shall stand on the flat ground while checking engine oil level.
- Inspect engine oil level when the engine has run for 2~3 minutes and stopped for 2~3 minutes

Check engine oil level.

When the engine oil level is at the lower limit, refill engine oil to its upper limit

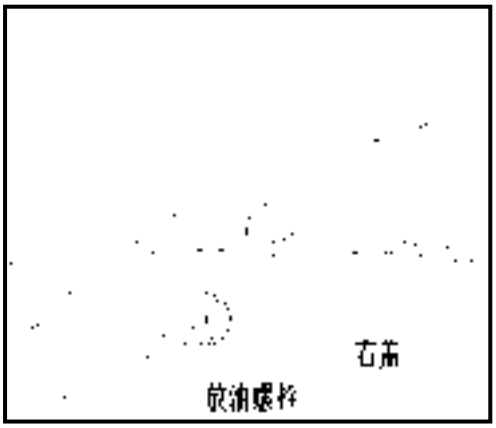

Engine oil replacement

Attentions

When the engine is warm, replace engine oil. The oil can flow out easily.

Shut down the engine.

Screw off the drain plug at the bottom of crankcase to drain engine oil.

When the engine oil is completely drained, put back cleaned drain plug and sealing ring.

Refill engine oil to specified level.

Engine oil capacity: 1.0-1.2L

Check if there is engine oil leakage. Start the engine and run th

Check engine oil level again.

Gasoline filter

Inspect the deterioration and damage for fuel pipe

Replace in case of deterioration, damage or fuel leakage.

Warning!

No smoke, no fire.

Throttle cable inspection and adjustment

Check if the throttle cable is unhindered.

Check stroke of throttle cable

Stroke shall be: 2-6mm.

The main adjustment position is at the throttle.

Release the locknut, and then adjust the adjusting nut.

Air Cleaner

Replace air cleaner.

Remove seat cushion

Remove the left side cover

Remove the screw of air cleaner

Remove the bolt of air cleaner

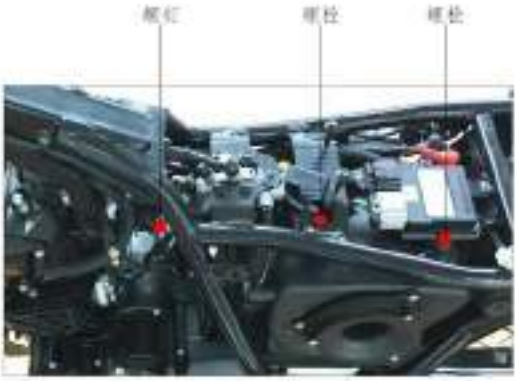

Remove the fixed screw on the
air cleaner cover
Unscrew the air cleaner.
Remove the paper element from
the air cleaner.
Check the contamination and damage c
If the filter is contaminated or
damaged, if necessary replace it with a
If it is contaminated, replace it with a new one.

Replacing Time

If driving under adverse conditions or in rainy days frequently, replace the air cleaner earlier.

Attentions

Check whether the air cleaner is installed in place before installing the air cleaner cover.

Spark plug

Remove the spark plug cap

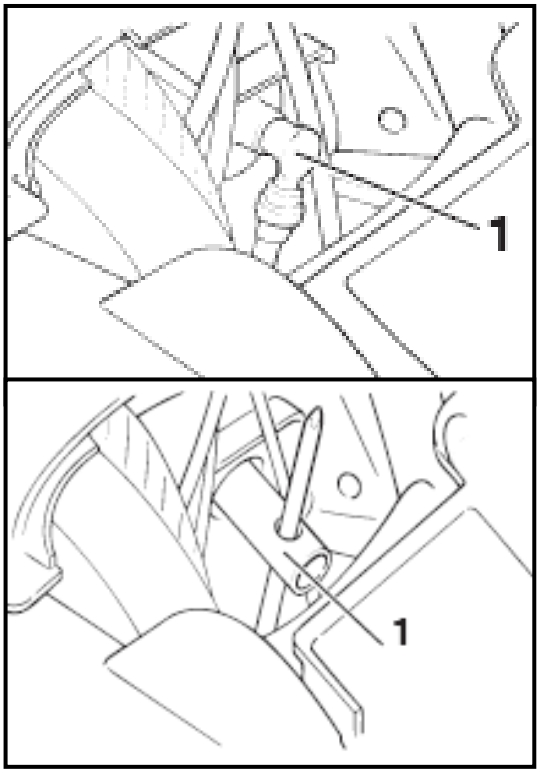

Remove the spark plug with a spark plug socket.

Check the burning, contamination and carbon deposits for spark plug.
Eliminate with a spark plug eliminator or steel brush in case of occurrence.

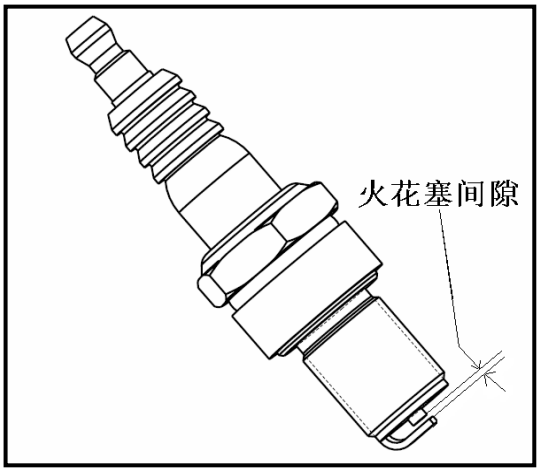

Check the stroke of spark plug.
Stroke: 0.6-0.7mm
Spark plug model: D8RTC

*** Attentions**

Install the spark plug manually, and then tighten it with a spark plug sleeve.

Battery

Battery removal

Remove the right cover.
Disconnect the battery negative (-) lead wire first and then the positive (+) lead wire.

Take out the battery.

Warning!

During positive lead wire disconnection, be sure to prevent the tools being used from touching the frame; or it will result in short circuit sparks, which may ignite gasoline and damage battery. It is dangerous!

Install the battery in reverse order of removal.

Warning!

To avoid short circuit, please connect positive (+) lead wire first and then the negative (-) lead wire.

Battery chrging (circuit voltage) inspection

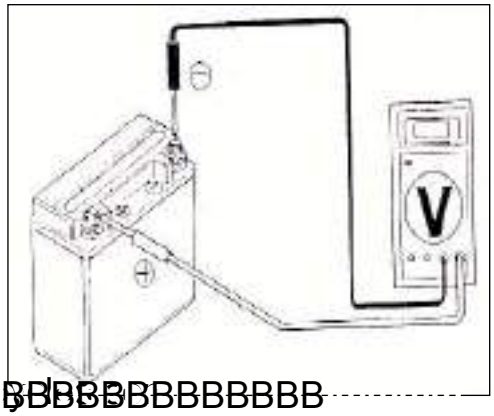

Open the seat cushion.
Open the top cover of air cleaner, and remove the connector wire of battery.

Measure the battery voltage between terminals.

Fully charged: 13.1V

Undercharge: 12.3V

***注意 Attentions**

Voltmeter shall be used for charging-state inspection.

Charging

Connection method: Positive pole of battery charger is connected to battery positive lead wire; Negative pole of battery charger is connected to battery negative lead wire.

Warning!

Battery shall be away from fire source.

- Shut off charger switch first before or after charging in case sparks may be generated at connection parts, which may result in explosion.
- During charging, please take the current time labeled on the battery as the basic time.

*** Attentions**

- Battery quick charging is not recommended except in case of emergency.
- After charging, wait at least 30minutes and then measure the battery voltage.

Charging current: Standard: 0.4A
Quick charging: 4.0A
Charging time: Standard: 10-15hours
Quick charging: 30 minutes
After completion of charging: closed-circuit voltage: higher than 12.8V

Throttle

Idle speed adjustment

*** Attentions**

Perform idle speed adjustment when the engine is warm.

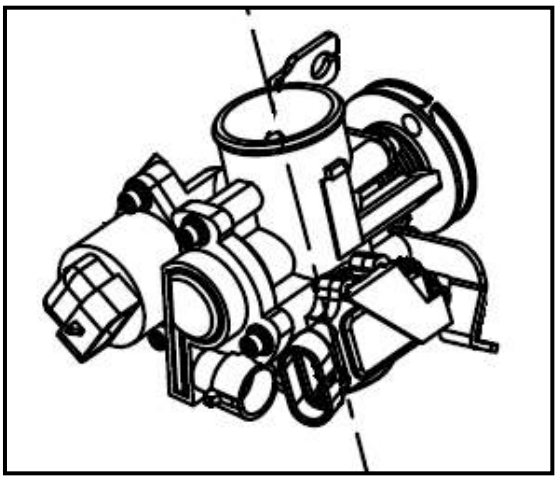

Warm up the engine and then adjust idle speed.
Run the engine and connect engine tachometer.
Adjust the throttle cable lock-screw to specified RPM.
Idle speed RPM: 1400±100rpm/min
If idle speed RPM is unsteady or idle speed is not smooth when the vehicle is gently accelerated, adjust idle speed and adjust screws again.

Drive chain slackness

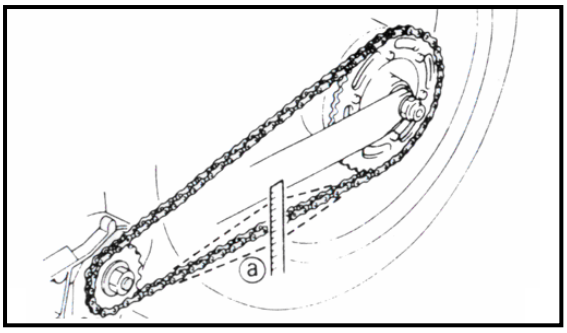

The service lift of drive chain depends on the appropriate lubrication, adjustment and maintenance. Improper lubrication, adjustment and maintenance may cause the earlier wearing of drive chain and sprocket. They shall be maintained frequently under the adverse conditions.

Stand vertically the motorcycle on the flat ground and check drive chain slackness ○,a

Drive chain slackness: 10-20mm

Adjustment of drive chain
Adjust the drive chain after every traveling 1000km to make the chain sag to be 10-20mm. You should frequently the drive chain as appropriate.

Warning!
It is recommended to adjust the time interval to the maximum extent. In fact, the chains should be checked and adjusted before riding every time. Excessive chain slack may cause the chain-off or serious damage to the engine.

Adjust the chains in accordance with the following methods:
(1) Prop up the motorcycle with a support.
(2)Unscrew the rear shaft nut ①.
(3)Unscrew the locknut ②.
(4)Rotate the adjustment bolt ③ to the right and left t
front/rear sprockets align the center in a straight line when
this adjustment process, there are reference marks on th
these reference marks can be aligned to each other and us
other end. After aligning and adjusting the chain slackne
for final inspection.

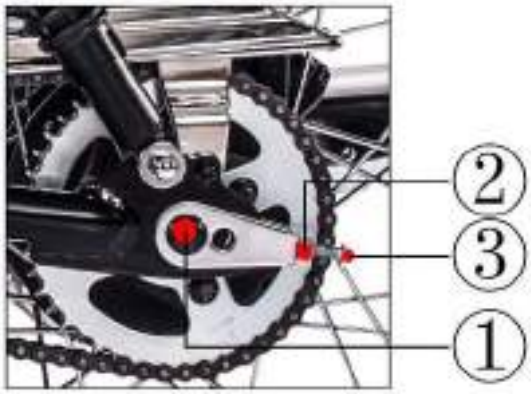

Attentions:
Check the wearing of both sprockets after replacing the chains, and replace sprockets of necessary.

The followings should be checked during routine inspect
(1) Loosen pins
(2) Damaged rollers
(3) Dry or rusted chain links
(4) Twisted or cut chain links
(5) Excessive damage
(6) Loosen chains

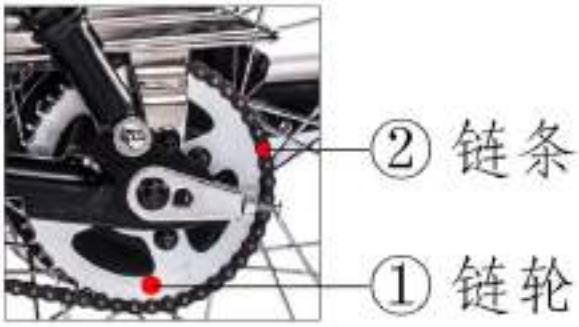

In case of defects mentioned above occurred, the sprc
should be check for sprockets.
(1) Excessively-worn wheel teeth

(2) fractured or broken wheel teeth
(3) Loosen fixing nut of sprockets

Lubrication of drive chain

Select the drive chain lubricating grease in priority. The drive chain lubricating grease may be purchased, or alternated with engine oil or other lubricating oil. Dip the joints of chain links to make the lubricating grease penetrate into chain plate, pin, lining and roller.

*** Attentions**

Do not install new drive chains onto worn sprockets or install worn drive chains onto the new sprockets.

Keep both sprocket and drive chain in good conditions, or newly replaced chain or sprocket will be worn soon.

Stroke of front/rear brake

Front brake stroke

Measure stroke of front brake at the tip of front brake handle.

Stroke: 10-20mm

Brake pedal stroke

Measure stroke of brake pedal at the tip of front brake handle.

Stroke: 20-30mm.

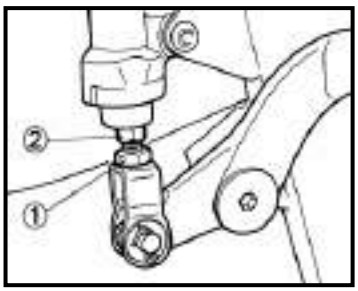

Adjust the stroke of brake pedal as per the following methods:

(1) Release the locknut ① of lift rod.
(2) Screw or unscrew the lift rod ② to adjust the stoke of front brake handle to be 20-30mm.
(3) Tighten the locknut of lift rod ①.

Wearing of front/rear brake shoe

Wearing of front brake shoe

When stepping on the brakes in the end, check the oil level at oil cup, if the brake fluid level is lower than the arrow in the figure, intermediately replace the brake shoe.

Wearing of rear brake shoe

When stepping on the brakes in the end, check the brake fluid level is lower than the arrow in the figure, intermediately replace

Headlamp

Adjustment

Unscrew the mounting bolts of headlamp to adjust the headlight optical axis.

Clutch

Start the engine, speed up the revolving speed slowly and check the clutch’s operating condition. Check the friction block of the clutch if the motorcycle does not run or the engine is stalled. Replace it with a new one if necessary.

Stroke of clutch: 10-20mm

Adjust the stroke of clutch as per the following methods:

(1) Release the locknut ① of lift rod.
(2) Screw or unscrew the lift rod ② to adjust the stoke of front brake handle to be 20-30mm.
(3) Tighten the locknut of lift rod ①.

Front/Rear suspension system

Front suspension

Grasp the front brake handle and compress upward and downward the front shock absorber to check its actuation.
Check if the front shock absorber leaks oil and if the components are loosened.

Rear Suspension

Compress upward and downward the rear shock absorber to check its actuation. Check if components on the rear shock absorber are loosened or injured.
Lift and support the rear wheel and swing the wheel to check if engine suspension bushing is loosened.

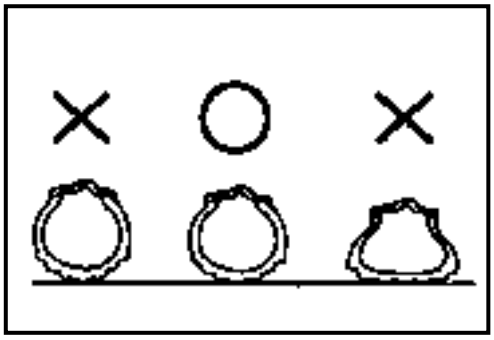

Nuts/bolts/fasteners

Inspect whether bolts, nuts and fasteners at every part of the motorcycle are loosened.
If they are loosened, tighten them to specified torque.

Wheel rim/tire

Check whether there are cracks, nails and similar sharp objects, and other injuries on the tires.

Check tire pressure.

*** Attentions**

Measure cold inflation tire pressure.

Specified air pressure Unit: Kpa

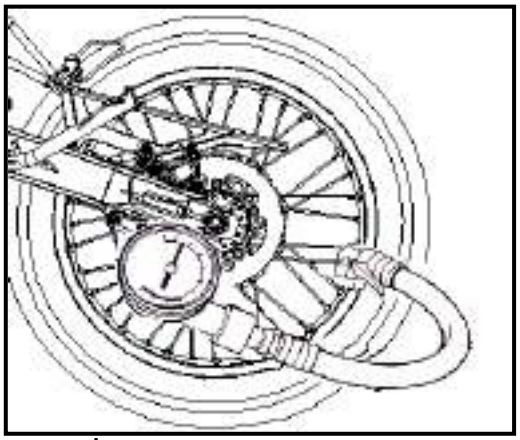

Tire specifications			Tire pressure
BX125	Front tire	100/90-18	225±10kpa
	Rear tire	120/80-17	225±10kpa

When the tread depth of the tire reaches the value in the table below, the tire should be replaced.

The minimum tread depth	
Front tire	1.6mm
Rear tire	2.0mm

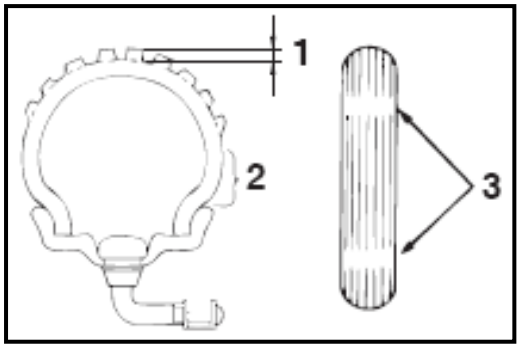

Warning:
Do not attempt to repair damaged tire. Wheel balance and tire reliability may deteriorate.
Improper tire inflation will cause abnormal tread wear and threaten the safety. Underinflated tires may cause tire slip, or tire disengagement, which may lead to tire deflation caused by control failure.Driving a motorcycle at excessive tire wear situation is a dangerous thing as the adhesive force of the tire is lower than the normal.

Check whether the front axle fixing nut is loose.
Check whether the rear axle fixing nut is loose.
If it is loose, it shall be tightened to the specified torque value.
Torque value: front axle 75-85N·m
Rear axle nut 75-85N·m

Steering stem bearing and handlebar fixation

Move left and right the handlebar and check if lead wires disturb it.
Rotate front wheel and confirm the handlebar can move smoothly.
If the handlebar does not move smoothly and is loosened, check ste

Vehicle body Inspection and Maintenance

Front and Rear Hydraulic Brakes **(CBS)**

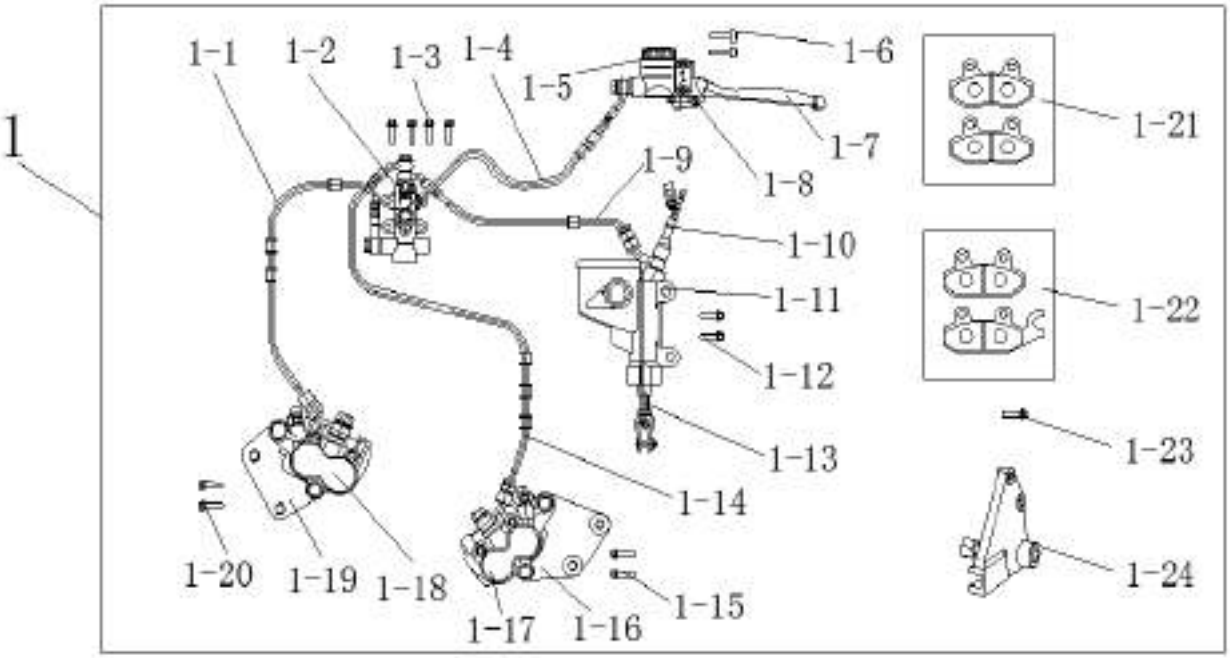

S/N	Name	S/N	Name
1	Disc brake assembly (CBS)	1-13	Rear disc brake push rod
1-1	Front disc brake hose 2	1-14	Rear disc brake hose 2
1-2	Disc brake CBS dispenser	1-15	Bolt M8×20
1-3	Bolt M6×45	1-16	Rear disc brake connecting plate
1-4	Front disc brake hose 1	1-17	Rear disc brake caliper assembly
1-5	Front disc brake upper pump	1-18	Front disc brake lower pump assembly
1-6	Bolt M6×25	1-19	Front disc brake support
1-7	Front disc brake handle	1-20	Bolt M10×35
1-8	Disc brake half-overlay	1-21	Front disc brake pad
1-9	Rear disc brake hose 1	1-22	Rear disc brake pad
1-10	Rear disc brake switch	1-23	Bolt M6×16
1-11	Rear disc brake upper pump assembly	1-24	Rear disc brake support
1-12	Bolt M6×25		

I Braking System

1.1 Maintenance Instructions

Precautions on operation

*** Attentions**

- Please do not contaminate braking assembly with oil while assembly or disassembly.
- Please use specified detergent to clean the braking assembly, or it may reduce braking performance.

Please check braking system before driving your motorcycle.

1.1.1 Specifications

Items		Standard Value	Service Limit	Items		Standard Value	Service Limit
Front	Special brake fluid	DOT4	-	Rear	Special brake fluid for hydraulic brake	DOT4	-
	Hydraulic brake disc thickness	4	3		Hydraulic brake disc thickness	4.0	3.0
	Brake shoe thickness	9mm	4.5mm		Brake shoe thickness	9mm	4.5mm
	Hydraulic brake disc diameter	φ276mm	-		Hydraulic brake disc diameter	φ220mm	-
	Hydraulic brake disc brake surface runout	0.1mm	-		Hydraulic brake disc brake surface runout	0.1mm	-
	Oil pumping cylinder inner diameter	Φ12.mm	-		Oil pumping cylinder inner diameter	Φ16mm	-
	Oil pumping piston outer diameter	Φ12 mm	-		Oil pumping piston outer diameter	Φ16mm	-
	Caliper cylinder inner diameter	Φ25 mm	-		Caliper cylinder inner diameter	Φ25mm	-
	Caliper piston outer diameter	Φ25 mm	-		Caliper piston outer diameter	Φ25-mm	-

	Distribution valve piston outer diameter	Front end Φ14 mm			Distribution valve piston outer diameter	Rear end Φ12.7 mm	

1.1.2 Torque value

Brake disc mounting bolts	**15-25N·m**
Front hydraulic brake lower pump mounting bolts	**25-35N·m**
Front hydraulic brake oil pump mounting bolts	**7-9N·m**
Front axle	**75-85N·m**
Rear brake disc mounting bolts	**15-25N·m**
Rear hydraulic brake lower pump mounting bolts	**25-35N·m**
Rear hydraulic brake oil pump mounting bolts	**7-9N·m**
Rear axle	**75-85N·m**

1.2 Fault Diagnosis

1.2.1 Poor braking performance

- Improper brake adjustment
- Wearing of braking shoe assembly and hydraulic brake disc
- Improper installation of braking shoe assembly
- Contamination of braking shoe assembly and hydraulic brake disc

1.2.2 Brake drags or tight handle

- Improper brake adjustment
- Wearing of braking shoe assembly and hydraulic brake disc
- Improper installation of braking shoe assembly

1.2.2 Noisy Braking

- Wearing of braking shoe assembly and hydraulic brake disc
- Contamination of braking shoe assembly and hydraulic brake disc

1.2.4 Spongy Brake Handle/Brake Pedal

- Air found in hydraulic system
- Leakage of hydraulic system
- Dirty brake pedal/disc
- Caliper piston seal wear
- Brake pedal/disc wear
- Dirty caliper
- Improper sliding of caliper
- Small quantity of brake fluid
- Brake fluid passage blockage
- Caliper piston bending / incompleteness

- Master cylinder piston bending / incompleteness
- Dirty master cylinder piston
- Brake handle / pedal bending

1.2.5 Brake Jammed Or Aside

- Dirty brake pedal/disc
- Wheel bias
- Brake hose junction clogged or restricted
- Brake disc bending / incompleteness
- Improper sliding of caliper

1.2.6 Brake Drag

- Dirty brake pedal/disc
- Wheel bias
- Brake pedal/disc wear
- Brake disc bending / incompleteness
- Improper sliding of caliper

5.2.7Hard Brake Handle/Pedal

- Braking system clogged / restricted
- Caliper piston adhesion/abrasion
- Improper sliding of caliper
- Brake fluid pipe clogged / restricted
- Caliper piston seal wear
- Master cylinder piston adhesion / abrasion
- Brake pedal/disc bending

1.3 Front Hydraulic Brake

1.3.1 Removal

*** Attentions**

•Replacement of brake shoe assembly group.
•If the brake shoe is reused, it shall be marked on its side before demolition so that it can be installed back to its original position.

Release the brake cylinder assembly mounting bolts.
Remove the brake cylinder assembly from

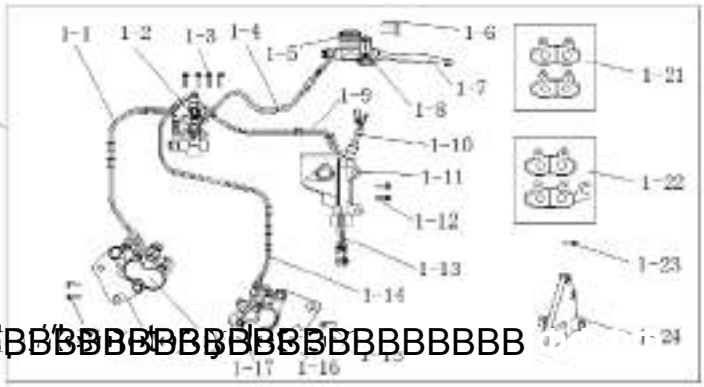

the front shock absorber.
Remove the following components from the front shock absorber
Front hydraulic brake

1. Brake shoe
2. Front hydraulic brake tube
3. **Brake cylinder assembly**

***注意 Attentions**

• Please do not contaminate braking shoe assembly with oil while assembly or disassembly • Please use specified detergent to clean the braking assembly, or it may reduce braking performance.

Remove the front axle.
Remove the front wheel.
Remove the front hydraulic brake disc from the front wheel

1.3.2 Inspection

Check whether the braking shoe is worn out. Replace the braking shoe if necessary.
Measure the braking shoe and brake disc, and record the maximum value.
Measure the thickness of braking shoe.

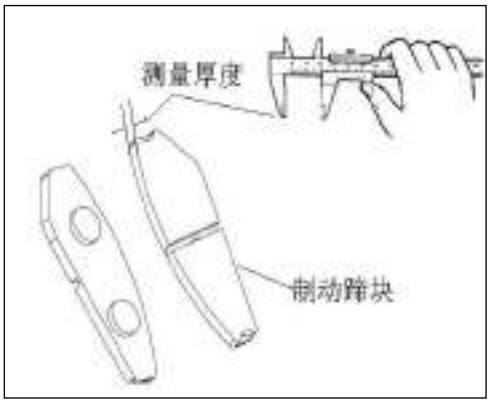

Allowable limit: brake shoe 4.5mm

Specifications
Diameter of front hydraulic brake disc: φ276mm

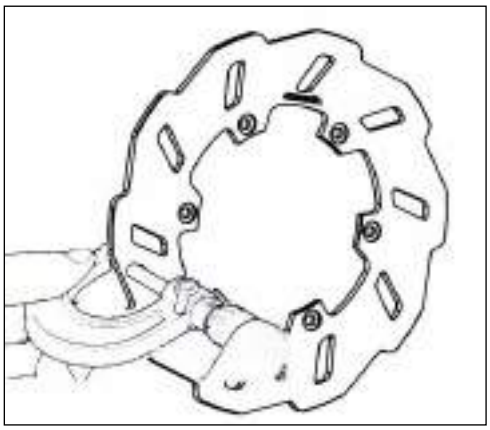

*** Attentions**

• The brake disc shall be wrapped with #120 abrasive paper in case of rustiness. • A micrometer shall be used for the measurement.

If brake disc and braking shoe are contaminated by grease or their thickness is smaller than service limit, replace them.

*** Attentions**

• Measure with vernier caliper and

micrometer.

1.3.3 Installation

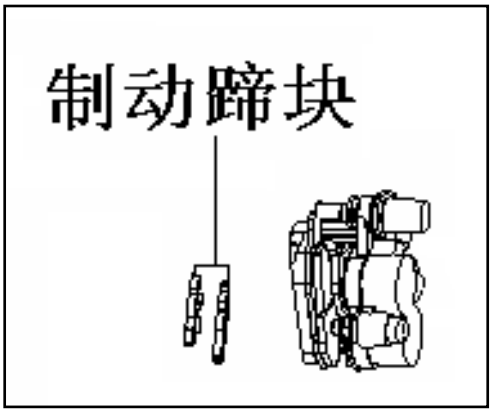

Install front wheel.

Install the front hydraulic brake tubing and brake cylinder assembly.

The braking shoe should not be contaminated by grease.

*** Attentions**

A contaminated braking shoe will reduce braking performance and result in brake failure.

Tighten the bolt to their specified torque value.

Torque value:

Front brake disc mounting bolts:	**15-25N·m**
Front hydraulic brake lower pump mounting bolts	**25-35N·m**
Front hydraulic brake oil pump mounting bolts	**7-9N·m**
Front axle	**75-85N·m**

1.4 Rear Hydraulic Brake

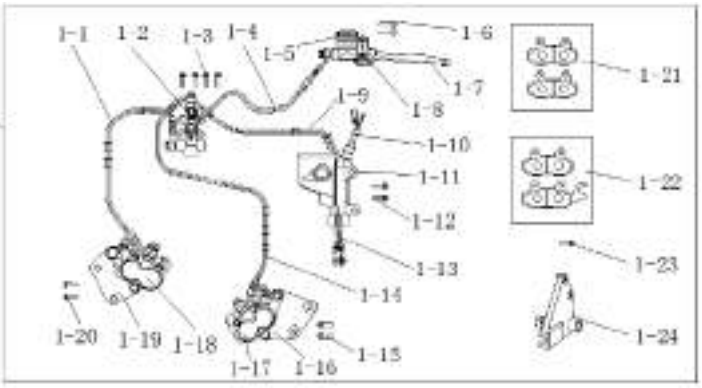

1.4.1 Removal

Remove the rear brake oil pump body assembly.

Remove the brake cylinder assembly of rear brake.

Remove the rear wheel.

Remove the brake discs from the rear wheel hub.

Note:

The brake disc cannot be removed, if necessary, please remove it after heating.

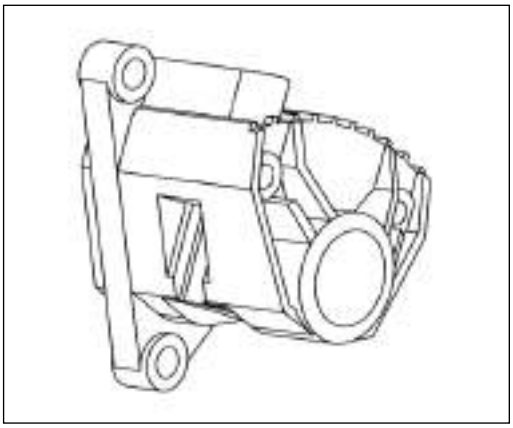

*** Attentions**

- Replace braking shoes.
- If a braking shoe will be used again, please mark it on the side before removal so as to re-install it onto its original place.

Remove the following assemblies from the rear wheel

Rear brake:

1. Rear hydraulic brake assembly
2. Braking shoe assembly
3. Lining

4, Disc brake bracket

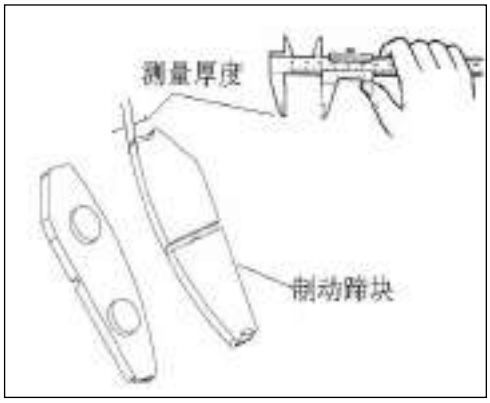

1.4.2 Inspection

Check whether the braking shoe is worn out. Replace the braking shoe if necessary.

Measure the braking shoe and brake disc, and record the maximum value.

Measure the thickness of braking shoe.

Service limit: braking shoe: 4.5mm

Specifications

Diameter of rear hydraulic brake disc: φ220mm

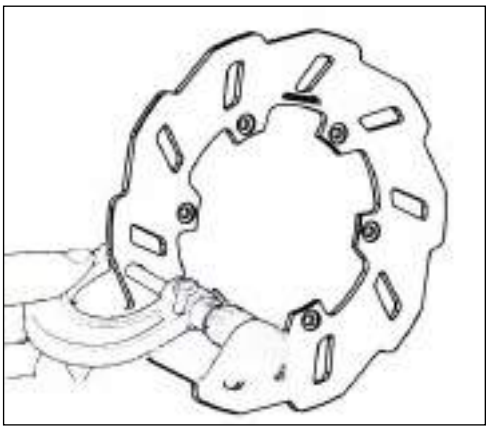

*** Attentions**

• If the hydraulic brake disc is rusty, please polish it with #120 abrasive paper

• A micrometer shall be used for the measurement.

If the brake disc and braking shoe are contaminated by grease or their thickness is smaller than the service limit, replace them.

*** Attentions**

• The vernier caliper and micrometer shall be used for the measurement.

1.4.3 Installation

Install the rear wheel.

Install the rear brake disc.

Install the brake cylinder of rear brake.

*** Attentions**

A contaminated braking shoe will decrease braking performance and result in braking failure.

Tighten bolts and nuts to their specified torque value.

Torque force value:

Rear brake disc mounting bolts 15-25N·m

Rear hydraulic brake lower pump mounting bolts 25-35N·m

Rear hydraulic brake oil pump mounting bolts 7-9N·m

Rear axle 75-85N·m

Do not contaminate brake shoes and brake discs with grease.
If a braking shoe or a brake disc is polluted by grease, clean it with a brake cleaner.

*** Attentions**

A contaminated brake shoe will decrease braking performance.

II Motorcycle Exteriors

Disassemble the motorcycle body in the following sequence.

Rear-view mirror → Headlamp → Instrument bracket Instrument

Front mud fender → Seat cushion →Left and right cover → Fuel tank →

Left and right pedal →Tail lamp → Rear mud fender →License plate bracket

*** Attentions**

Do not damage the cover of the motorcycle while removing or installing.
Do not break the hooks of the cover while removing or installing.
Place the panel and the cover board right to the respective slots.
Install correctly the hooks of each part while combining.
Do not damage the accessories while installing covers.

Front wheel/ front suspension

Front wheel

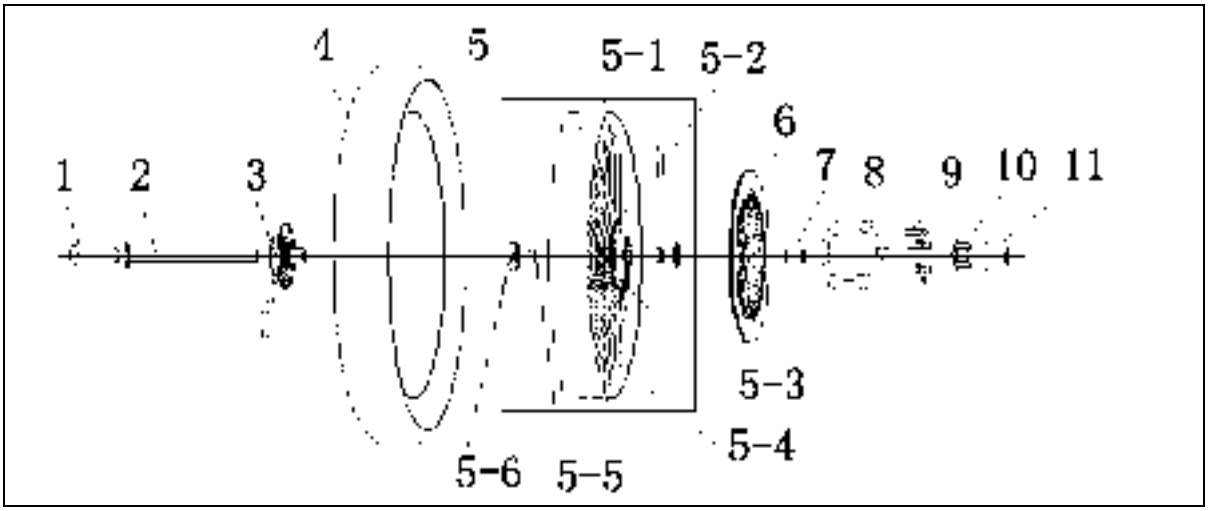

S/N	Name	S/N	Name
1	Axle rubber sleeve	5-5	Roller bearing 6302
2	Front axle	5-6	Hub oil seal
3	Speedometer	6	Front brake disc
4	Front wheel assembly	7	Front axle sleeve
5	Front wheel assembly	8	Front disc brake disc lock sheet
5-1	Front wheel rim	9	Bolt M6×16
5-2	Valve nozzle	10	Front axle self-lock nut M14×1.5
5-3	Front hub	11	Axle rubber sleeve
5-4	Front wheel spokes		

III Front wheel/ front suspension

3.1 Service Data

Precautions

Prior to disassembly of the front wheel, use a jack to support against bottom of the motorcycle, and it is important that the front wheels must not rotate reversely when they keep away from the ground.
During operation, it is important that any grease must not be attached on the braking shoe.

Reference for motorcycle

Reference for motorcycle

Measuring position	Item		Standard value (mm)	Allowable limit (mm)
Front wheel shaft	Bending			0.2
Front wheel	Wheel rim shimmy	Longitudinal direction		2.0
		Horizontal direction	Not less than 1.0	2.0

Torque force value Tool

方向把固定螺钉 **22-29 N·m**		轴承拆卸杆
Mounting bolt of steering handlebar	**40-60 N·m**	**Dismantling rod, bearing**
前轮轴 **75-85 N·m**		
Front wheel shaft	**75-85 N·m**	

3.2 Fault Diagnosis

3.2.1 Steering handlebar rotating without flexibility

- Steering handlebar bearing is faculty.
- Steering handlebar bearing is damaged
- Adjusting nut of motorcycle faucet is too tight.
- Pressure within the tire is insufficient.

3.2.2 Direction not steady

- The handlebar bearing is damaged.
- Tire pressure is insufficient.
- Front fork and front wheel shaft are bent.
- Front wheel tire is subjected to deformation, and the tire is not aligned.

3.2.3 Front wheel wobbling

- Wheel rim is deformed.
- Front wheel bearing is worn.
- Front tire has defects.
- Tires or wheels are unbalanced.

3.2.4 Wheel failing to rotate

- Failure of bearing of front wheel shaft
- Braking failure
- Failure of wheel shaft
- Bending of front wheel

3.2.5 Abnormal noises from front shock absorber

- Inadequate fluid in the shock absorber
- Friction noise of shock absorber guard
- Looseness bolts of shock absorber

3.2.6 Only being operated to one side or not traveling in a straight line

- Unbalanced adjustment of left and right fork
- Bending of shock absorber
- Bending of wheel
- Improper installation of wheel
- Bending of frame
- Damaged wheel bearing
- Damaged central axle of swing arm

3.2.7 Soft front shock absorber

- Inadequate fluid in the shock absorber
- Infirm shock absorber spring
- Low tire pressure

3.2.8 Too hard front shock absorber

- Inappropriate fluid weight
- Blocked shock absorber fluid channel

3.3 Front wheel

3.3.1 Removal

Support the vehicle bottom to make the front wheel lifted
Unscrew the locknut of front axle
Remove the front wheel shaft
Remove the front wheel
Remove the oil seal and bearing of oil seal remover and shaft bearing replacer.

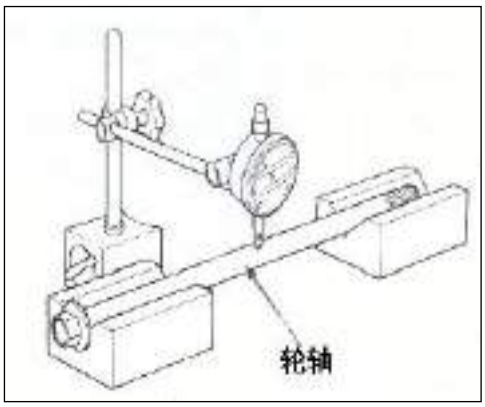

3.3.2 Inspection

3.3.2.1 Inspection of wheel shaft bending

Place the wheel shaft onto a V-shaped base, and the measure eccentricity with a micrometer gauge.
Service limit: replacing in case of exceeding 0. 2mm.

3.3.2.2 Inspection of wheel disk wobbling

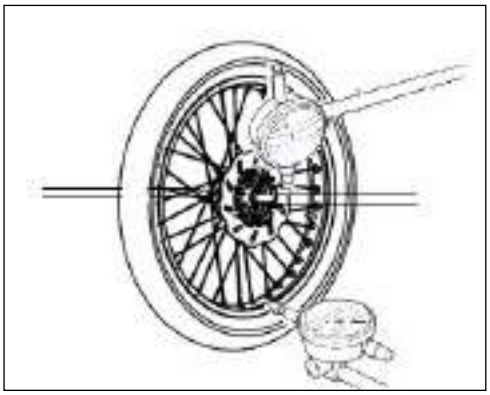

Service limit:
Longitudinal direction: replacing in case of exceeding 2. 0mm
Horizontal direction: replacing in case of exceeding 2. 0mm

3.3.2.3 Inspection of front wheel bearing

Remove the middle lining of front wheel and the oil seal.

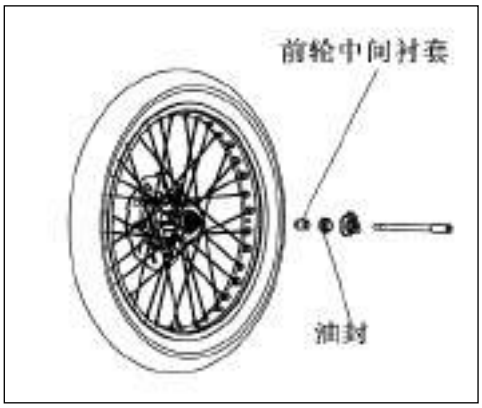

Inspect rotation of bearing.
If the bearing is found not to rotate, it indicates that the bearing is worn or loosened, and it shall be replaced with new bearing.

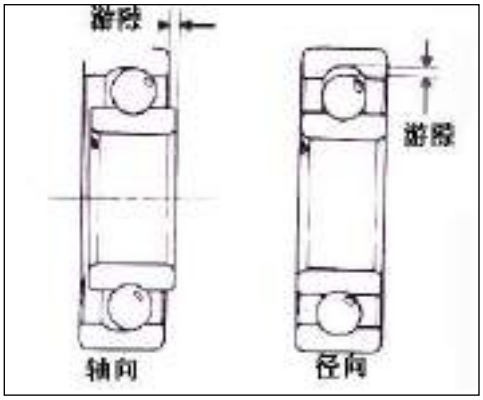

3.3.3 Bearing replacement

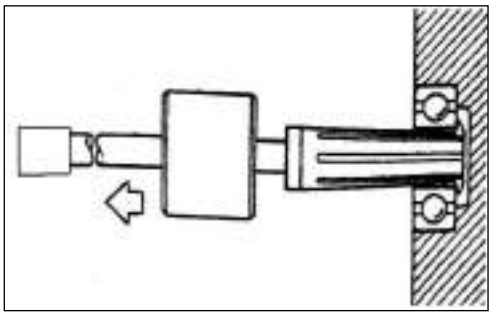

After remove front wheel, front wheel shaft and front wheel lining, oil seal removing appliance and bearing removing appliance must be used to remove the lower oil seal and bearing respectively.
Note: the removed bearing must be replaced with new bearing.
During installation, apply the lubricating grease onto the bearing.
And then, use the bearing mounting tool to press the bearing.

*** Attentions**

- The bearing must be pressed in a parallel manner.
- The bearing oil seal shall be pressed towards outside.

3.3.4 Installation

Apply lubricating grease for the oil seal at front wheel.
Apply lubricating grease for the gear position and movable position of speedometer.
Install the brake disc after the involution of the gear housing assembly of speedometer

Attentions

- The odometer gear housing component will deform if the component is not aligned to the locked front wheel shaft.
- Rotate the wheel after mounting the axle to check whether the drive axle of speedometer to rotate.

Install the front axle and lock it

Torque value

Front axle: 75-85N·m

3.4Steering handlebar

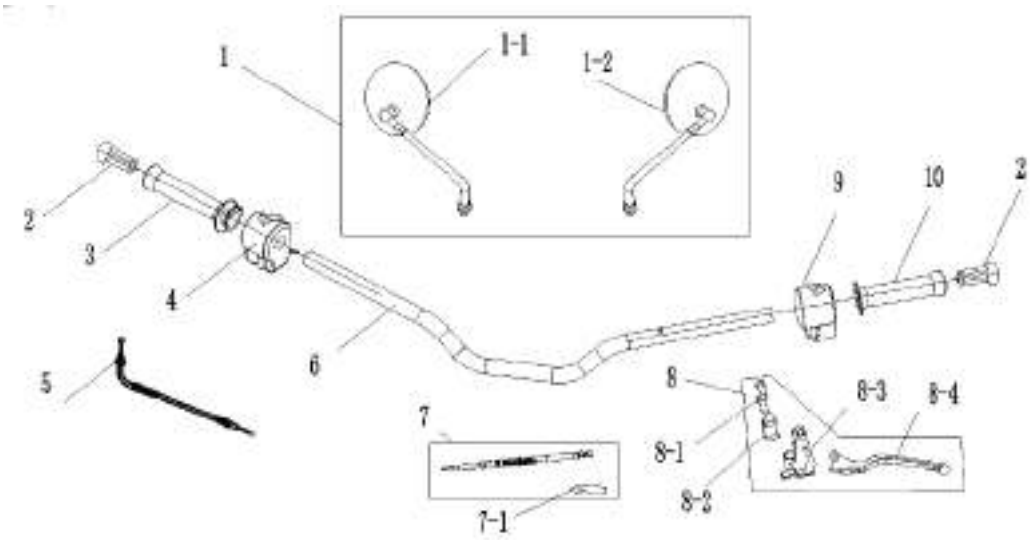

S/N	Name	S/N	Name
1	Rear-view assembly	8-1	Hexagon socket head bolts M6×22
1-1	Right rear-view mirror	8-2	Fixed half cover
1-2	Left rear-view mirror	8-3	Left handle seat
2	Right balancer	8-4	Left handle
3	Right handle grip	9	Left brake handle switch
4	Right brake handle switch	10	Left handle grip
5	Throttle cable	11	Left balancer
6	Handlebar tube	12	Rear brake arm
7	Clutch cable	13	Rear brake return spring
7-1	Clutch cable sleeve	14	Bolt M8×16
8	Clutch handle assembly		

3.4.1 Removal

Remove front brake handle and left handle assembly
Remove the throttle seat and right handlebar assembly
Remove the throttle cable assembly
Remove the left direction handlebar sleeve
Remove the clutch cable assembly and valve cable assembly
Remove the mounting bolts of handle and remove the handle

3.4.2 Installation

It should be installed in reversing sequence of disassembly.
Mounting bolt
Torque value: 25-35N·m

3.5 Front fork

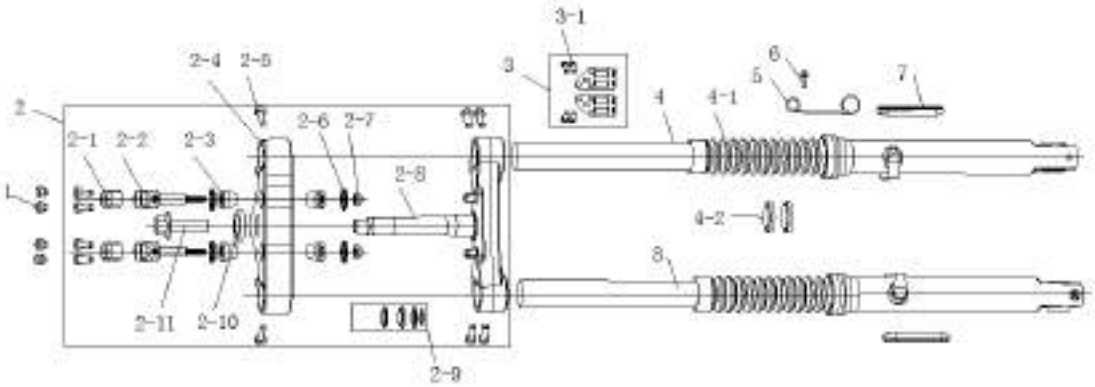

S/N	Name	S/N	Name

1	Decorative buckle	2-10	Steering stem upper washer
2	Steering stem assembly	2-11	Steering stem cover nut
2-1	Steering handle clamp	3	Headlight bracket
2-2	Steering handle holder	3-1	Screw M6×16
2-3	Steering handle holder damped adhesive	4	Front left shock absorber
2-4	Upper steering	4-1	Front shock absorber boot
2-5	Hexagon socket cap head screws M8×30	4-2	Front shock absorber seal
2-6	Holder washer	5	Speedometer cable clip
2-7	Nut M8	6	Bolt M6×12
2-8	Steering stem	7	Side reflector
2-9	Steering bearing	8	Front right shock absorber

3.5.1 Removal

Remove the front fender.
Remove the front wheel.
Remove the brake hose and speedometer cable.
Remove the front shock absorber.
Remove the steering fixing nut.
Remove the steering handle.
Tools:
Steering handle fixing screw wrench.
Fixing nut wrench.

3.5.3 Installation

Tools:
Fixing nut wrench.
Turn the front fork left and right to confirm its smoothness without any looseness.
Steps:
Install the steering handle.
Install the front shock absorber.
Install the front wheel.

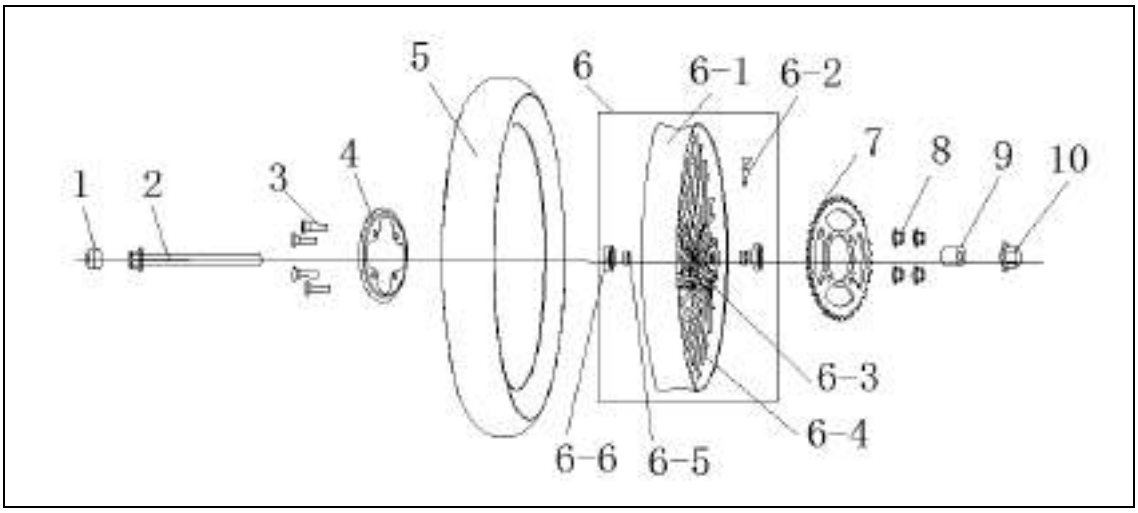

S/N	Name	S/N	Name
1	Axle rubber sleeve	6-3	Rear hub
2	Rear axle	6-4	Rear wheel spoke
3	Step bolt M8×25	6-5	Rolling bearing 6302
4	Rear brake disc	6-6	Hub seal
5	Rear tire assembly	7	Sprocket
6	Rear wheel assembly	8	Sprocket self-lock nut M10×1.25
6-1	Rear rim	9	Real wheel left axle sleeve
6-2	Valve cock	10	Real axle self-lock nut M14×1.5

Rear fork

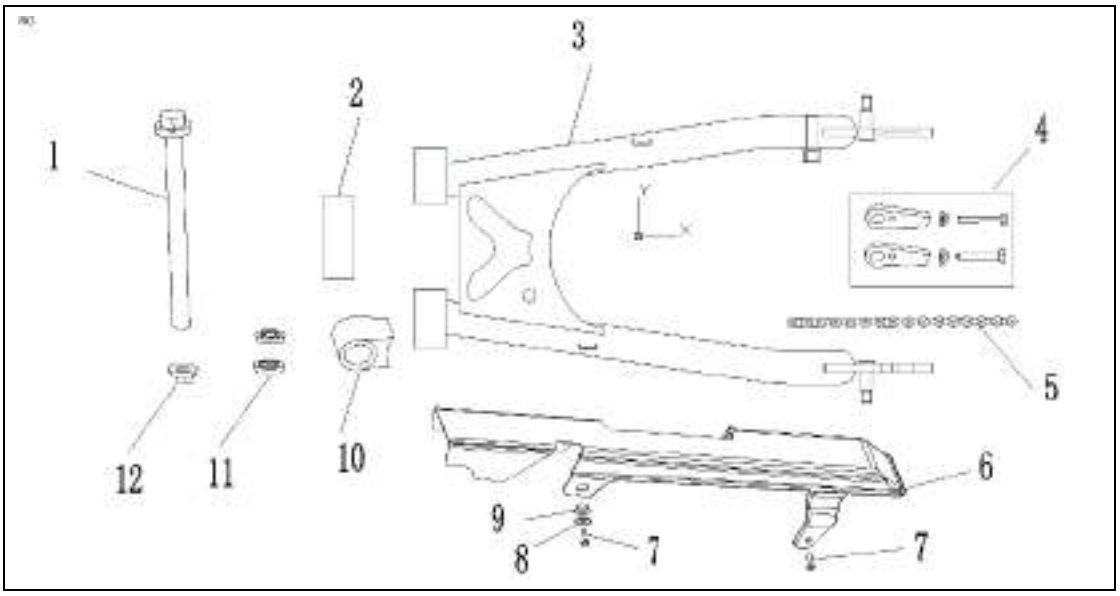

S/N	Name	S/N	Name
1	Single-head flat fork shaft	7	Bolt M6×16
2	Flat fork sleeve	8	Plain washer φ6
3	Flat fork assembly	9	Fanged washer
4	Chain adjuster	10	Chain protecting clamp
5	Drive chain	11	Rear fork dust cover
6	Half chain box	12	Flat fork self-lock nut M14×1.5

IV Rear Wheel/Rear Suspension

4.1 Service Data

Precautions

Any grease spot is not allowed on the brake disk and brake shoe.

Reference

Item		Standard value (mm)	Allowable limit (mm)
Rear wheel wobbling	Longitudinal		2.0
	Horizontal		2.0

Locking torque force

Nut, rear wheel shaft	**75-85N·m**
Top nut, rear shock absorber	**35-45 N·m**
Bottom nut, rear shock absorber	**35-45 N·m**

4.2 Fault Diagnosis

4.2.1 Rear wheel wobbling

- Wheel rim is deformed.
- Rear wheel bearing is worn.
- Tire is faulty.
- Swing arm bearing is worn or damaged.
- Driving chain regulator adjusts improperly.
- Tires and wheels are unbalanced.
- The tire pressure is too low.
- Frame or rear swing arm is bent.

4.2.2 Wheel rotating without flexibility

- Rear hydraulic brake disc bending
- Rear wheel bearing wear
- Overtightness of drive chain

4.2.3 Spongy suspension

- Shock absorber spring is not firm with shake.
- Front suspension regulator is incorrect.
- Oil leakage occurs to shock absorber.
- Tire pressure is too low.

4.2.4 Hard suspension

- Assembly bearing on the shock absorber is damaged.
- Shock absorber cylinder is bent.
- Rear swing arm pivot bearing is damaged.
- Rear swing arm pivot bearing is bent.
- Suspension regulator is incorrect.
- Tire pressure is too high.

4.2.5 Only being operated to one side or not traveling in a straight line

- Rear axle is bent.
- Axle arrangement/chain adjusters on both sides are incompetent.

4.3 Rear Wheel

4.3.1 Removal

Release the adjuster.
Release rear axle nut.
Remove rear axle nut, and remove the chain from the sprocl
Remove the rear axle.
Remove the rear wheel.

4.3.2 Inspection

4.3.2.1 Axle bending inspection

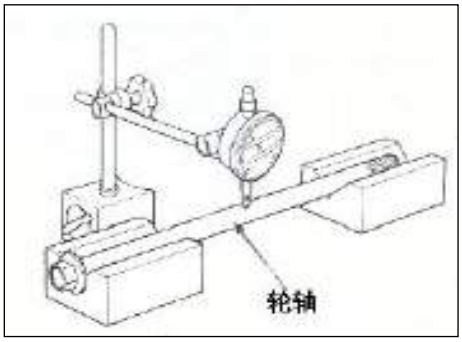

Place the axle on a V-seat, and measure eccentricity with a micrometer gauge.
Allowable limit: replacing in case of exceeding 0.2mm

4.3.2.2 Wheel rim wobbling inspection

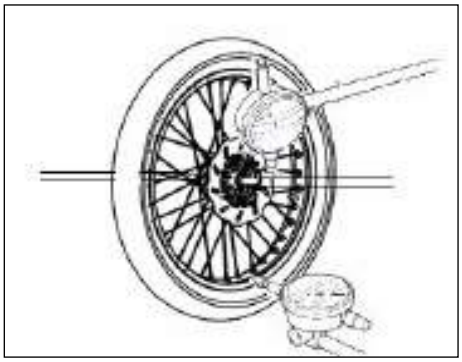

Rotate the rear wheel manually and measure eccentricity with a micrometer gauge.
Allowable limit:
Longitudinal direction: replacing in case of exceeding 2. 0mm
Horizontal direction: replacing in case of exceeding 2. 0mm
If the rear wheel wobbling exceeds the allowable limit, the rear wheel bearing is loosened, and the rear wheel is bent. Replace the rear wheel shaft after inspection.

4.3.3 Installation

Install the rear wheel in reverse sequence of disassembly and lock the nut.
Lock nut, rear wheel shaft
Torque value: 75-85N·m

4.4 Rear Shock Absorber

4.4.1 Removal

Remove the fixing screws of rear shock absorber.
Remove the rear shock absorber.

4.4.2 Inspection

Visually inspect whether the shock absorber is damaged.

The inspection items include:
——whether the shock absorber cylinder is bent or damaged
——whether the shock absorber is subject to deformation or oil leakage
——whether the rubber block is worn or damaged
——whether the spring is damaged

Inspect whether the rest parts are damaged or worn
If necessary, replace the shock absorber

4.4.3 Installation

Installation must be initiated in the reverse sequence of removal.
Mount the upper fixing nut and lower mounting bolt on the rear shock absorber.
Lock to the specified torque value.

Torque value:
Upper fixing nut: 35-45N·m
Lowe fixing nut: 35-45N·m

4.5 Rear swing arm

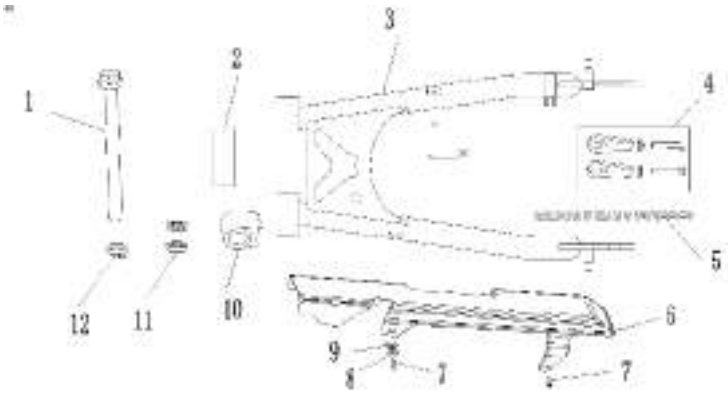

4.5.1 Disassemble the rear swing arm

Disassemble the chain guard plate
Disassemble the chain tensioning wheel and the rear axle shaft
Disassemble the rear wheel and the rear shock absorber
Disassemble the rear swing arm installation shaft
Take down the weld assembly of the rear swing arm

4.5.2 Inspection of rear swing arm

Check the mounting shaft of rear swing arm and turn the shaft or measure it with a micrometer gauge after it is placed onto a flat surface. If the shaft is bent, replace it.

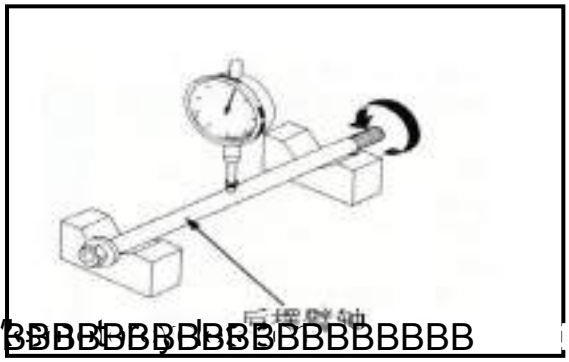

*** Attentions**

Do not attempt to straighten bent shaft.

Clean parts of rear swing arm mounting shaft with a solvent.
Check rear swing arm shaft sleeve component and intermediate sleeve and if any damage is found, replace it.

4.6 Drive Chain

4.6.1. Removal

Stop the motorcycle on the flat ground, and support it securely.
Remove the shifting lever arm, left rear cover, and drive sprocket.
Remove the rear wheel, chain guard, and chain drive.

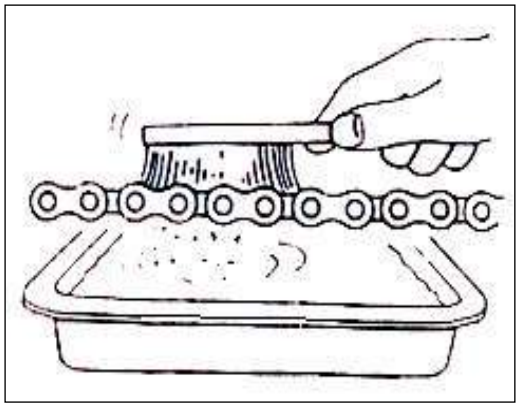

4.5.2. Inspection

Clean the drive chain, put it into kerosene, brush the dirt,
and then take out the chain from the kerosene and make it dry.

Check the roller ① and side panel ②,
if damaged or worn, replace the drive chain,

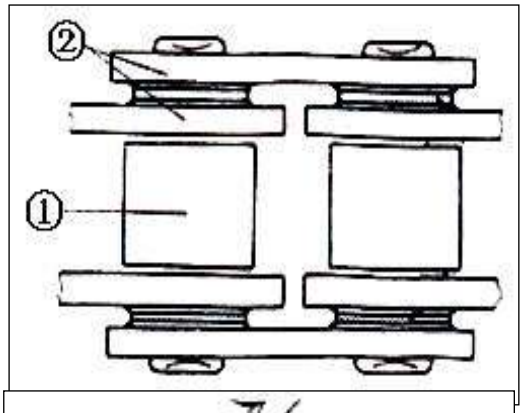

Lubricate the drive chain with the lubricant purchased from the store.
Check the drive chain, if it is hard, clean, lubricate or replace it.

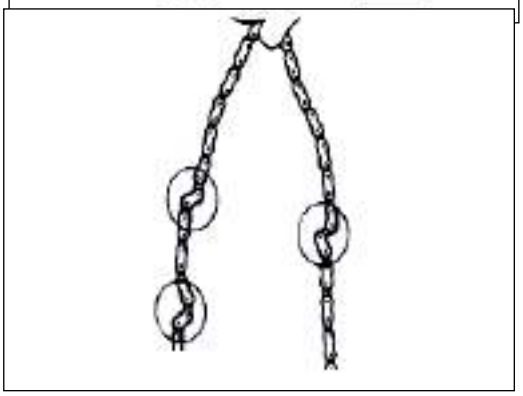

Check the drive sprocket, driven sprocket, if 1/4 teeth ○,a is worn, replace the sprocket, and in case of tooth bending, replace the sprocket.

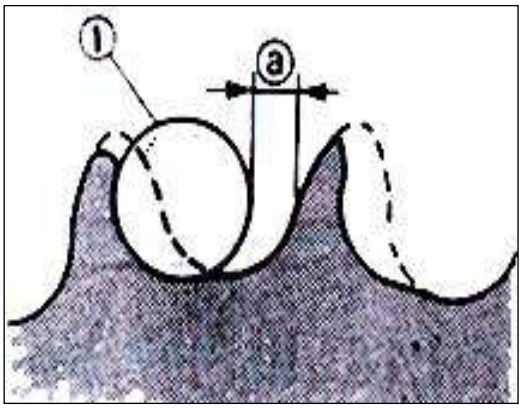

Check wheel bearings, if bearing clearance is found in wheel hub or the wheel has an unbalanced rotation, replace the bearings; check the oil seal, if worn or damaged, replace it.

4.5.3 Drive chain slack adjustment

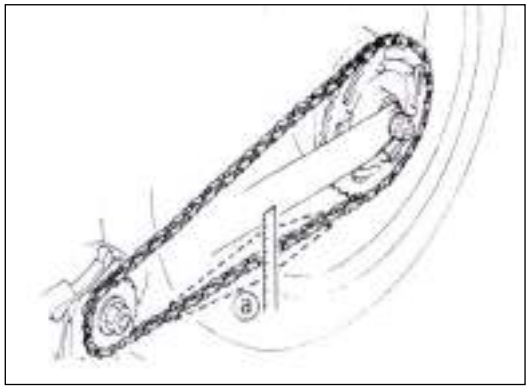

Make the motorcycle parked on a flat place, so that it remains upright.

Check the drive chain slack ○,a, ranging 10-20 mm. If out of this range, make adjustment.

Unscrew the rear axle nut ①.

Adjust the drive chain slack. The adjustment steps include:

Unscrew the lock nut ②, screw or unscrew the adjustment device ③ until the slack meets the specified value.

Screw, the slack may increase;

Unscrew, the slack may reduce.

Attentions:

The number of turns of each adjustment device should be kept the same in order to properly install the axle.

Finally, tighten the lock nut.

4.5.4 Installation

Installation must be initiated in the reverse sequence of removal.

Adjust the looseness of drive chain and free stroke of brake pedal.

If the looseness is too small, the engine and other key parts will be consequently overloaded.

Maintain the chain looseness within the specified limits.

Inspection and Maintenance of Electrical System

Charging system

V. Battery/Charging System

5.1 Service Data

Precautions

*** Attentions**

1. The battery can be charged and discharged, and used repeatedly. If a battery is laid aside after discharging, its service life will be shortened and its performance is degraded. Performance of a battery is usually reduced after about 2-3 years' use. Voltage of the performance-reduced (capacity drops) battery can be resumed, but the voltage will run down quickly while loading.
2. Overcharging of battery: Usually overcharging is demonstrated by the battery itself. If short circuit occurs inside the battery, voltage or very low voltage on the terminals of the battery cannot be inspected. If the regulator fails, it will have too high voltage on the battery and the life-span of the battery will be shortened.
3. When the battery is laid aside for a long period, it will self-discharge and its capacitance will drop. The battery should be recharged every three months.
5. Charging system inspection: please perform inspection in accordance with the sequence listed in the fault diagnosis table.
6. If there is current going through the electric parts, the connector shall not be removed, or the voltage will be very high and electronic components inside the voltage regulator will be damaged. Set ignition switch at "Off" position and then begin your work.
7. It is not necessary to inspect maintenance-free (dry-charged type) battery. Electrolyte and distilled water are not required to be added.

8. Inspect the entire electric load.
9. Quick charging is forbidden except in emergency.
10. During quick charging, the battery must be removed from the motorcycle first and then be charged.
11. While battery is exchanged, please do not use liquid-feeding battery.
12. A voltmeter shall be employed to check the state of charged battery.

Service Data

Item			Specification
Battery	Capacity/type		12V-10AH/ lead-acid type
	Voltage (20℃)	Fully charged	13.5V
		Must be charged	12.3V(stop working for one hour)
	Charging current		Standard: 0.9A，Quick: 9A
	Charging time		Standard: 10-15hours; Quick: 30minutes
Magneto	Capacity		150W/1500rpm
	Coiling impedance value (20℃)		White-white 0.5-10Ω
Voltage regulator	Type		Full-wave rectification
	Battery charging voltage		14.5V±0.4V/5.000rpm

Tightening torque value

Tools

Rectifier bolt	**5.0 N·m**	Universal non-adjustable spanner
High-voltage coil pinch bolt	**9.0 N·m**	Flywheel remover
		Testing device
		Multimeter

5.2 Fault Diagnosis

No power

- Battery over discharged
- Wiring of battery is not connected.
- Fuse fails.
- Failure of power switch

Low voltage

- Battery is poorly charged.
- Poor contact.
- Failure of charging system
- Failure of voltage and current regulator

Unstable power

- Wiring of battery is poorly contacted.
- Discharging system is of poor contact.
- Lighting system is of poor contact or short circuit.

Failure of charging system

- Wire connector is of poor contact, short circuit or short line
- Defective voltage and current regulator
- Failure of generator
- 5.3 Battery

5.3.1 Battery Removal

Open the right side cover.
Disconnect the battery negative lead wire first and then the positive lead wire.
Take out the battery.

Warning!

> During positive lead wire disconnection, be sure to prevent the tools being used from touching the frame; or it will result in short circuit sparks, which may ignite gasoline and damage battery. It is dangerous!

Install the battery in the reverse order of removal.

*** Attentions**

> To avoid short circuit, please connect positive lead wire first and then the negative lead wire.

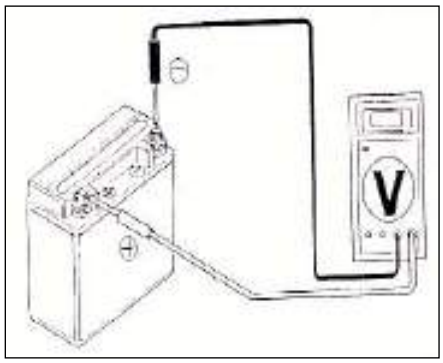

Battery charging (open-circuit voltage) inspection
Open the seat cushion.
Open the top cover of air cleaner and disconnect lead wire of the battery connector.

Measure voltage between terminals of the battery.
Fully charged: 13.5V
Undercharged: 12.3V (battery stop working for 1 hour)

*** Attentions**

> | A voltmeter shall be employed to check

the state of charged battery.

5.3.2 Charging

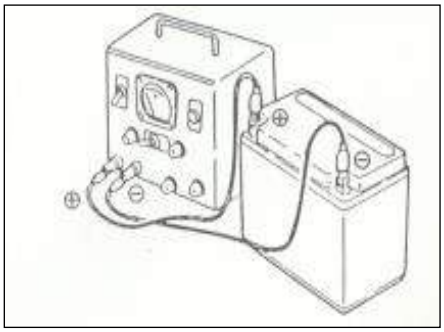

Connection method: Positive pole of battery charger is connected to battery positive pole;

Negative pole of battery charger is connected to battery negative pole.

Warning!

- Battery shall be away from fire sources.
- Shut off charger first before or after charging in case that sparks may be generated at connection parts, which may result in explosion.
- During charging, please take the current time labeled on the battery as the basic time.

*** Attentions**

- Battery quick charging is not recommended except in case of emergency.
- After charging, measure the battery voltage in 30minutes' time.

Charging current: Standard: 0.4A
Quick charging: 4.0A
Charging time: Standard: 10-15 hours
Quick charging: 30 minutes
Charging completed: open circuit voltage: higher than 12.8V

5.4 Charging System

5.4.1 Short circuit test

Disconnect the grounding wire from the battery and use a voltmeter to connect battery negative lead wire with grounding wire. Set the switch at OFF position and check if it is shorted.

*** Attentions**

Positive lead wire of multimeter is connected to negative lead wire of battery.

If abnormality is found, check if there is short circuit on ignition switch and main wiring.

5.4.2 Charging State Inspection

While in inspection, if the battery is fully charged, a multimeter shall be used for the test.
Warm up the engine and then install the fully charged battery onto the motorcycle.
Connect voltmeter between terminals of the battery.
Remove the main fuse and connect an ammeter between the two terminals.
Start engine and slowly raise RPM. Measure limited voltage and current.
Limited voltage/rpm: 14-15V (5.000rpm)
If limited voltage is beyond the specified range, check the voltage regulator.
Check the limited voltage of lighting system.

*** Attentions**

A multimeter shall be set at AC voltage.

Limited voltage: 13.5(+/-)0.5V/5.000rpm
If limited voltage is beyond the specified range, check the voltage and current regulator.

5.5 Voltage-current Regulator

5.5.1 Loop inspection on main wirin

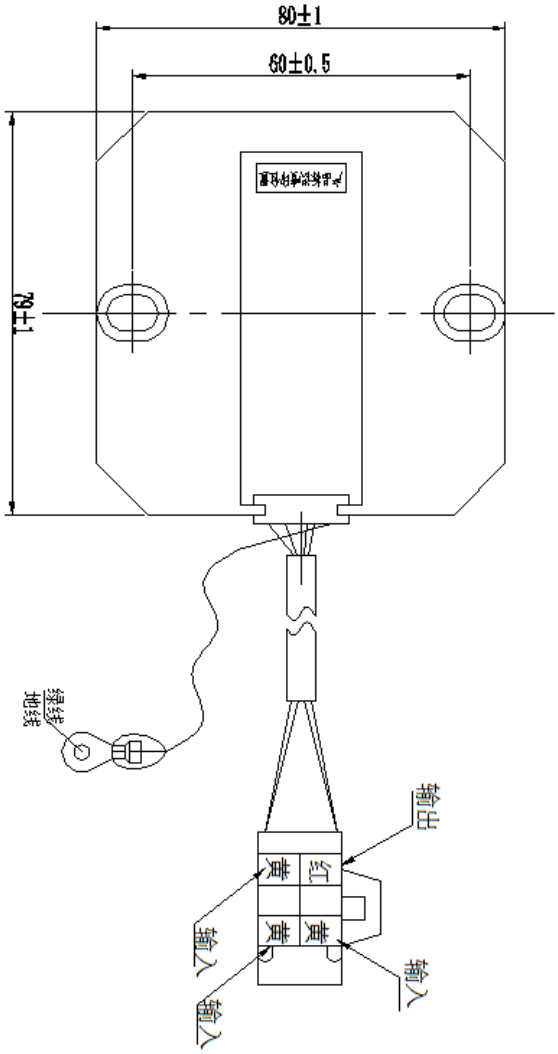

Disconnect the 6P plug on the voltage-current regulator.
Check continuity between main wiring terminals in the following way:

Item (wire color)	Judgment
Between battery (red) and ground of vehicle block	There is battery voltage.
Between ground wire (black) and ground of vehicle block	There is a lead wire.
Between charging coils (yellow 1 and yellow 3)	There is resistance between coils
Between charging coils (yellow 1 and yellow 2)	There is resistance between coils
Between charging coils (yellow 2 and yellow 3)	There is resistance between coils

5.5.2 Voltage-current regulator inspe

If the main wiring end is checked as completely normal, check whether the voltage and current regulator plug is in proper contact, and measure the impedance values between the terminals of the voltage and current regulator.

*** Attentions**

- Do not touch the metal part of multimeter probe with your finger.
- Check with a multimeter. If impedance values measured by different multimeters are not the same, it indicates incorrect inspection.

When impedance value between terminals is abnormal, voltage regulator shall be replaced.

Multimeter Positive Negative	Yellow 1	Yellow 2	Yellow 3	Black	Red
	Unit: MΩ				
Yellow 1		0.1~3	0.1~3	None	None
Yellow 2	0.1~3		0.1~3	None	None
Yellow 3	0.1~3	0.1~3		None	None
Black	None	None	None		None
Red	None	None	None	None	

5.6 Generator Charging and Lighting Coils

*** Attentions**

Inspection of generator charging coil can be performed on the engine.

Inspection

Disconnect the 4P connector on the generator.

Use a multimeter to measure impedance value between white coils of the generator and vehicle block.

Standard value: 0.6-1Ω(20℃)

测定值超过标准值时发电机线圈更换。

If measured value exceeds the standard value, the generator coiling shall be replaced.

5.8 Generator Removal

5.8.1 Removal

Remove the fixed bolts and screws.
Remove the left cover.

Fix the flywheel with an all-purpose non-adjustable wrench

Disassemble the flywheel hold-down nut
Take down the flywheel with a flywheel puller
Disassemble the fixed key
Disassemble the generator wire joint
Disassemble the generator stator

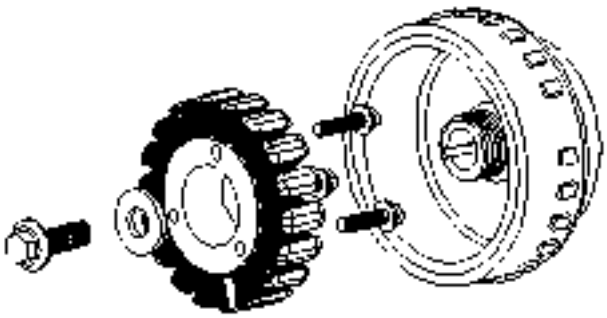

5.8.2 Installation

Install the generator stator onto the engine crankcase

Connect the generator terminal

Clean the taper of the crankshaft and the flywheel

Install the fixed key of the flywheel into the groove on the crankshaft, and confirm whether it is properly installed

Align the groove on the flywheel with the fixed key on the shaft

*** Note**

If the inner face of the flywheel is magnetic, make sure no any bolt

Fix the flywheel using a universal non-adjustable spanner and then tighten the locknut.

Torque value: 9.0 N·m

Install the left rear cover.

VI Ignition System

6.1 Service Data

Precautions on operation

1. Ignition system inspection: please perform inspection in accordance with the sequence listed in the fault diagnosis table.
2. The ignition system is solidified in the ECU assembly, so ignition time adjustment is unnecessary.
3. Ignition system inspection: please perform inspection in accordance with the sequence listed in the fault diagnosis table.
4. Ignition system ECU shall not be dropped and hung, or heavily knocked (this is also the main reason for its failure). Pay special attention to this while removing it.
5. Most of the ignition system problems are due to poor contact of sockets. Please check first if parts of the connector are well contacted.
6. Check if heat value of spark plug is proper. Improper spark plug may result in unsmooth engine running or burnt of spark plug.

7. The maximum voltage is taken to introduce inspection items in this Part. Inspection methods for impedance value of ignition coil are also recorded and judged.
8. Check ignition switch according to the continuity test table.
9. Remove generator and stator on operation instructions.

Service data

Item		Standard Value
Recommended Spark plug	Standard	D8RTC
Spark plug stroke		0.5-0.7mm
Ignition coil impedance value (20℃)	Primary coil	0.4Ω（+/-）10％
	Secondary coil	4.5-5.5KΩ
Impedance value of trigger (20℃)		100-200Ω
Ignition coil primary peak voltage		95-400V
Trigger voltage		1.7V 以上

工具 Tools

Accessories for maximum voltmeter
Multimeter

6.2 Fault Diagnosis

No sparking of spark plug

	Symptom	Possible causes(Determine the cause from 1 in sequence)
Ignition coil	When the high voltage power is too low.	①When inner impedance is too small, use the appointed tester to test. ②Crankshaft rpm is too low. ③Tester is disturbed (it is normal when several times' measured voltages are above the basic) . ④Wiring of ignition system is poorly contacted. ⑤Ignition coil is no good. ⑥Charging coil is bad. (Peak voltage measurement)

Secondary side voltage	While no high-voltage power supply, high voltage power is sporadic.	①Tester is wrongly connected. ②Poor ignition switch. ③Poor contact of joint ④Short-circuit or poor contact of bond strap ⑤ Poor charging coil (Peak voltage measurement) . ⑥ Defective trigger (Peak voltage measurement) . ⑦ Poor connector of high voltage wire. ⑧ Inferior ECU assembly.(after items ①-⑦ are tested and proved abnormal or spark plug no sparking.)
	High-voltage power is normal, spark plug no sparking.	①Inferior spark plug or secondary leakage of the ignition coil. ② Poor ignition coil.
Charging and lighting coils	No high-voltage power supply	①Inner impedance is too low. Use appointed tester to test. ②Crankshaft rpm is too low. ③Tester is disturbed (it is normal when more than one time's measured voltage is above the basic) . ④Poor charging coils (when items (①-③ are proved normal)
	No high-voltage power supply or high voltage power is sporadic.	② Poor ignition coil. ②Poor charging coil.
Trigger	High-voltage power supply is too low.	①Inner impedance is too low. Use appointed tester to test. ②Crankshaft rpm is too low. ③Tester is disturbed (it is normal when more than one time's measured voltage is above the basic) . ④Poor trigger (when items (①-③ are proved normal)
	No high-voltage power supply or high voltage power is sporadic.	①Poor ignition coil. ②Poor trigger.

6.3 Ignition System Inspection

*** Attentions**

• When the spark plug is not sparking, check if components of wiring are loosened or badly contacted and make sure all the voltage values are normal.

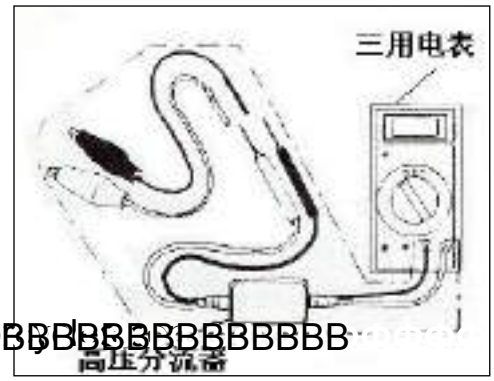

• There are many brands of multimeters with different interior impedance. The values they measured are not the same.

Connect a high-voltage shunt or an ammeter with input impedance higher than 10MΩ 10CV to the multimeter.

6.3.1 Primary voltage of ignition coil

If an old spark plug is removed and replaced with a good one, ground it with engine.

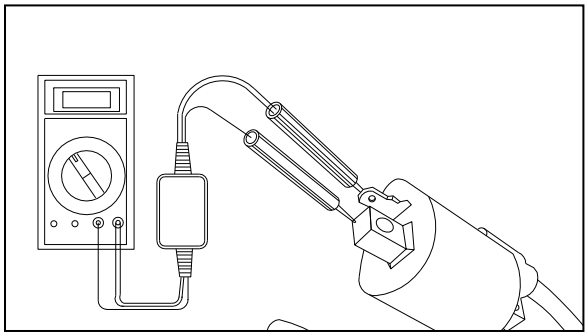

*** Attentions**

Test when wirings of all the circuits are correct.
Normal cylinder compression pressure means to test with spark plug installed on the cylinder head.

Remove the central cover.
Connect lead wire of ignition coil and a shunt is connected between terminal (black/white) of primary coil and grounding wire of vehicle block.
Press starter motor button or kick starter pedal to measure primary peak voltage of ignition coil.
Min. voltage: higher than 95V.

*** Attentions**

Please do not touch the metal parts of testing probe with your fingers while measuring voltage, or you will be shocked. Please take care.

6.3.2 Charging and lighting coil

*** Attentions**

Inspect when spark plug is installed on the cylinder head and compression pressure is normal.

Remove the magneto lead connector, magneto-end chargi
starter motor to measure the the maximum voltage of the ch
Minimum voltage: 95V or more.

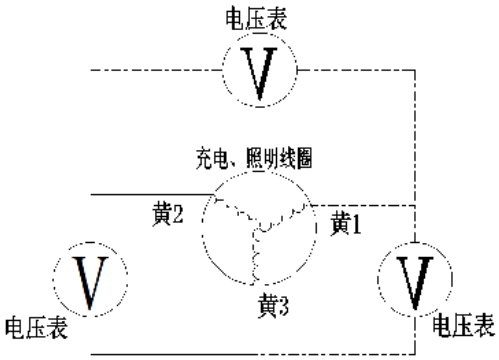

6.3.3 Trigger

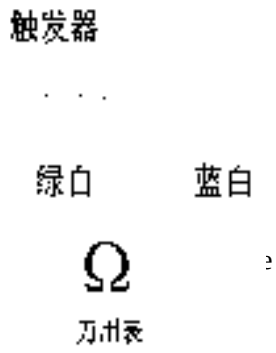

*** Attentions**

Inspect when spark plug is installed on the cylinder head and compression pressure is normal.

Remove the trigger lead connectors, connect the resistance grade e e blue-white line, the other end with the green-white line, measure the re

Connection mode: see the right figure.

Resistance: 125±20Ω.

6.4 Ignition Coil

6.4.1 Removal

Remove the motorcycle body cover.
Remove spark plug cap.
Remove primary lead wire of ignition coil.
Unscrew locknut of ignition coil and take out the ignition coil.
Install it in the reverse order of removal.

*** Attentions**

一 The primary coil is installed with black/white wire connector.

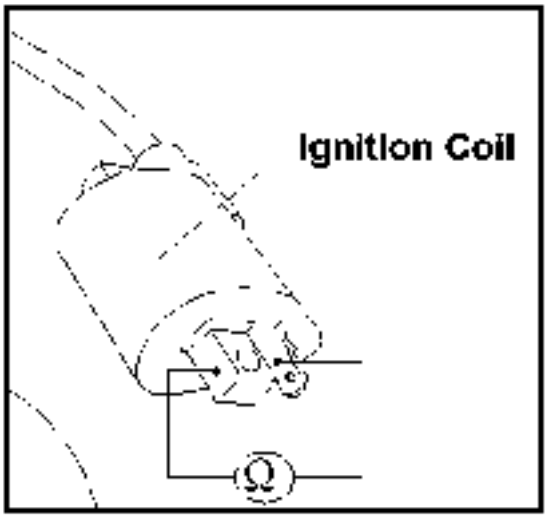

6.4.2 Primary coil inspection

Measure impedance between terminals of primary coil.
Standard value:0.4Ω±10％(20℃)
Impedance value within the range is good.
Impedance value "∞" indicates broken wire inside the coil. The coil shall be replaced.

6.4.3 Secondary coil

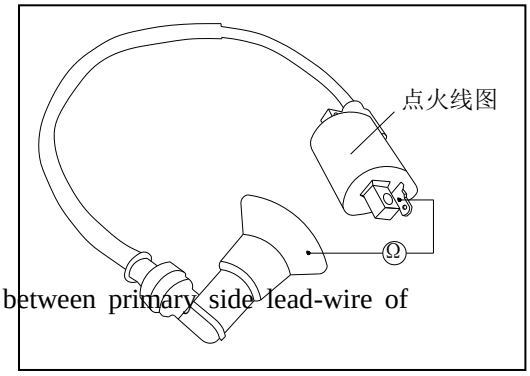

Provided with a spark plug. Measure impedance between lead-wire side of spark plug cap and terminal.
Standard value:8-11KΩ(20℃)
Impedance value within the range is good.
Impedance value "∞" indicates broken wire inside the coil.
Remove the spark plug cap and measure impedance value between primary side lead-wire of

ignition coil cap and negative terminal.
Standard value: 4.5-5.5KΩ(±)10%(20℃)

6.5 Trigger

*** Attentions**

Trigger inspection can be performed on the engine.

Inspection

Remove the trigger lead connectors, connect the resistance grade er
blue-white line, the other end with the green-white line, measure the re
Connection mode: see the right figure.
Resistance: 125±20Ω.

VII. Starting System

7.1 Service Data

Precautions on operation

Starter motor removal can be performed on the engine.
Removal refers to removal instructions.

Basic data

Item	Standard	Service Limit
Length of starter motor electric carbon brush	12.5mm	8.5mm
Starter idler shaft bushing		8.3mm

Starter idler shaft OD		7.94mm

Tightening torque value

Starter motor clutch cap bolt **12 N·m**
Starter motor clutch locknut **95 N·m**

工具 Tools

Locknut wrench
Universal un-adjustable wrench

7.2 Fault Diagnosis

Stator motor cannot run	Stator motor runs weakly	Starter motor rotates but the engine does not
•Broken Fuse	•Low battery	•Defective starter clutch
•Low battery	•Poor connecting wire contact	•Starter motor counter-rotate
•Defective ignition switch	•Stator motor gear stuck by foreign substances	•Low battery
•Defective starter clutch		
•Defective braking switch		
•Defective starter relay		
•Defective connecting wire contact		
•Defective starter motor		

7.3 Starter Motor

7.3.1 Removal

*** Attentions**

Before removing starter motor, the ignition switch must be set at “OFF” position. Disconnect battery grounding wire and then turn on the power supply to check if the starter motor runs to confirm safety.

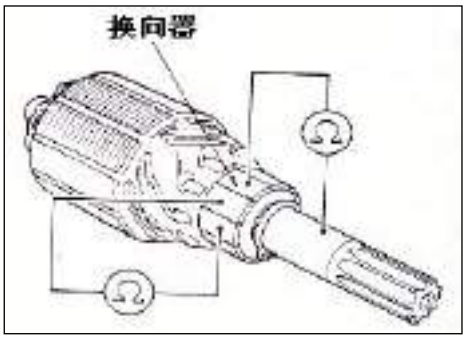

First remove the lead-wire clip of starter engine.
Remove starter motor pinch bolt and take down the starter motor.
Roll up the rubber waterproof jacket and remove starter motor connector.

7.3.2 Disassembly

Disassemble housing screw, front cover, motor housing and other parts.

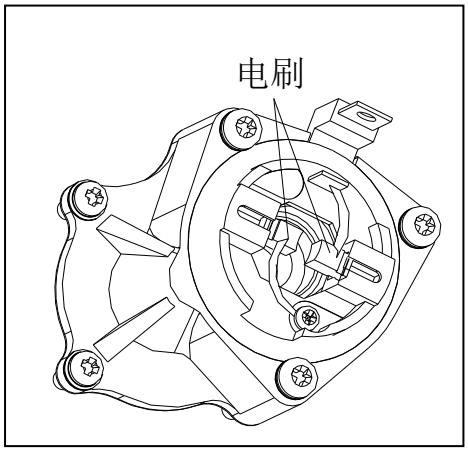

7.3.3 Inspection

Inspect other component assemblies.

Replace with a new one when there is surface partial friction, injuries or burning loss.

Commutator shall be cleaned when there is metal particles adhered to its surface.

Inspect continuity between contact surfaces of other assemblies.

Confirm uncontinuity of armature shaft among surfaces of commutator.

Inspect continuity of starter motor housing.

Confirm uncontinuity between conducting terminal and starter motor housing.

Inspect continuity between conducting terminal and brush.

Replace it with a new one if abnormality exits.

Inspect carbon brush holder for continuity. If there is continuity, replace it.

Measure carbon brush length

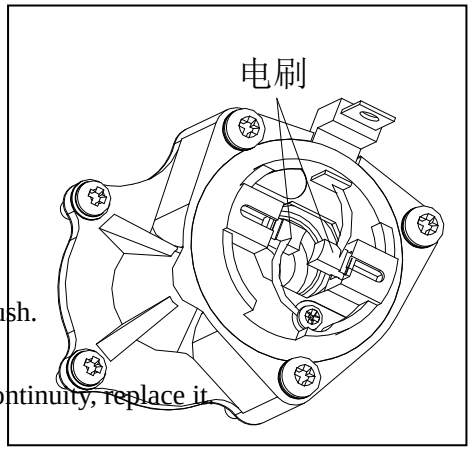

Service limit: replace it when it is shorter than 8.5mm

Check rotation smoothness of the needle bearing in the front cover and whether it is loosened when it is pressed in.

If there is abnormality, replace it with a new one.

Check whether the oil seal is worn or damaged.

7.3.4 Assembly

Apply lubricating grease on the oil seal in the front cover.

Install brush onto the carbon brush holder.

Apply lubricating grease on movable parts at both ends of brush shaft.

Press carbon brush into its holder and install front cover of motor.

*** Attentions**

- There should be no hurt on the contact surface of carbon brush and armature. Take care.
- Installation shaft of armature cannot hurt lip of oil seal. Take care.

Install a new washer ring onto the front cover.

Align and install the thread-hole of motor housing to the thread-hole of front cover.

Tighten housing screws.

*** Attentions**

When assembling housing and front cover, armature can work as a magnet to easily pull the front cover up; and then gently press it down with hands to complete the assembly.

7.3.5 Installation

Install lead wire of starter motor and be sure to install the dust seal.

Install the starter motor.

Install rear brake wire clip.

7.4 Starter Relay

7.4.1 Actuation Inspection

Remove the right cover.

When the ignition switch is set at "ON" position, press starter motor and a "Click" sound can be heard.

"Click" sound indicates normal.

No sound:
- Check starter relay voltage.
- Check starter relay ground wire loop.
- Inspect starter relay actuation.

7.4.2 Starter relay voltage inspection

Lift and support the main stand. Measure the voltage between negative pole (green/yellow) of starter relay connector and vehicle ground wire.

Set ignition switch at "ON" position and catch the brake lever. Battery voltage shall meet the requirements.

When there is no voltage at wire terminal of starter relay, inspect braking switch continuity and lead wire.

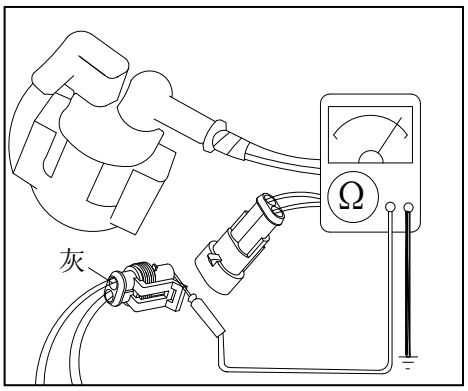

7.4.3 Starter relay ground loop inspection

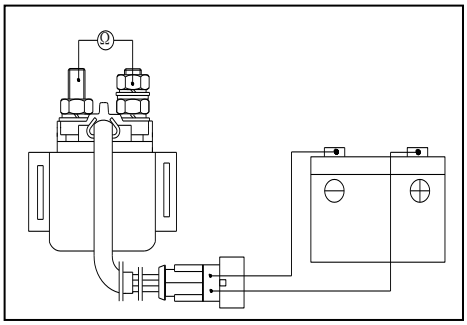

Remove starter relay connector.
Inspect continuity between grey wire of connector terminal and vehicle ground wire.
When the starter button is pressed, continuity between grey wire of connector and vehicle ground wire shall be fine.
If there is no continuity, inspect starter button continuity and lead wire.

7.4.4 Actuation inspection

Connect starter relay with battery and connect terminal of starter motor with multimeter.
Connect fully charged battery between black wire and green/yellow wire of relay. A “tap” sound of operation can be heard on the relay and resistance displayed by multimeter is “zero”.

VIII. Bulbs/Switches/Instruments

8.1 Service Data

Precautions on operation
Remove switches from the motorcycle and perform continuity test.

8.2 Fault Diagnosis

“ON” lamp of main switch is not lit.
Defective bulb.
Defective switch.
Poor contact of connector or broken wire.

8.3 Headlamp bulb replacement

8.3.1 Removal

Remove the screws to facilitate the removal of the headlig
Remove the connectors.
Remove the headlight locking clip to take off the bulb.

8.3.2 Installation

Install the light back in the reverse order of removal.

8.4 Replacement of the front turn signal light

8.4.1 Removal

Loosen the light fixing screw.
Take off the light.

8.4.2 Installation

Install the light back in the reverse order of removal.

8.5 Replacement of taillight/license plate light/rear turn signal light

8.5.1 Removal

Remove the screws and take off the lampshade.

Remove the bulb from the socket.

8.5.2 Installation

Install the bulb in the reverse order of removal.

8.5.3 Replacement of rear turn signal lig

8.5.3.1 Removal

Loosen the fixing screws.
Take off the light.

8.5.3.2 Installation

Install the bulb in the reverse order of removal.

8.6 Instrument

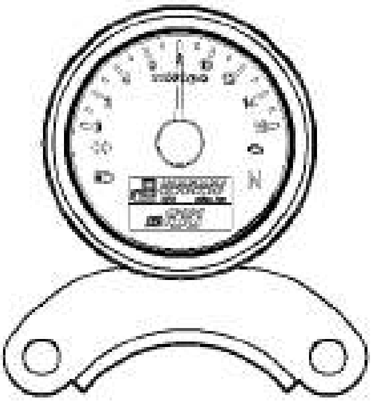

Remove the front headlight.
Remove the meter connectors.
Remove the screws
Remove the meters.
Install the instrument orderly in the reverse order of removal.

8.7 Main Switch

8.7.1 Inspection

Remove the headlamp.
Disconnect connector of main switch lead wire.
Check the connector terminal for continuity.

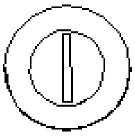

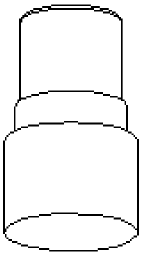

接线原理图

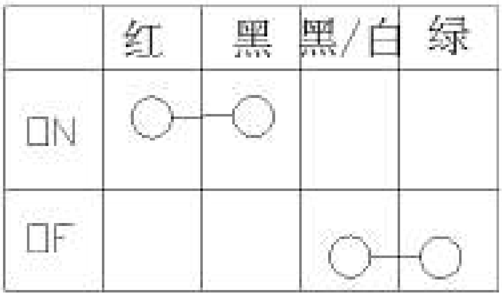

	红	黑	黑/白	绿
□N	○—	○		
□F			○—	○

8.8 Electric Horn

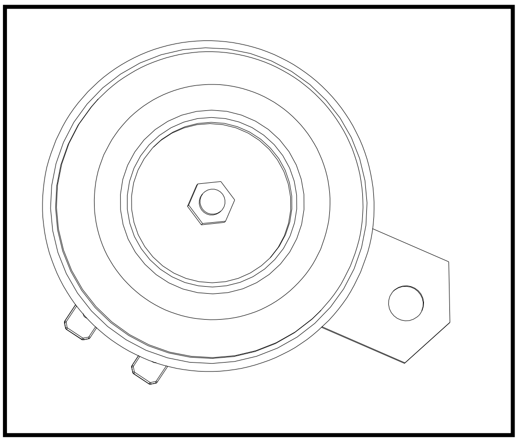

Inspection

Disconnect wire to the electric horn.
Connect lead wire of horn with the battery.
When the electric horn sounds, it indicates the horn is in good condition.

8.9 Handle Switch

Screw off mounting bolt on the brake lever and take down the bracket.
Remove throttle handle and bolts.
Take down the throttle handle from the handle and re

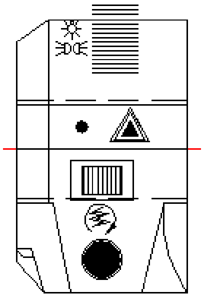

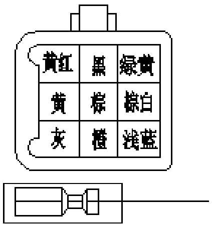

Remove mounting bolt on the handle and take down the handle.

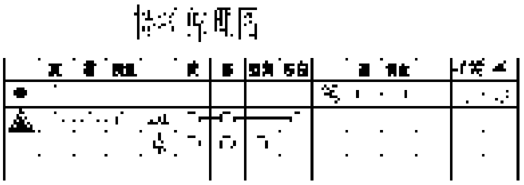

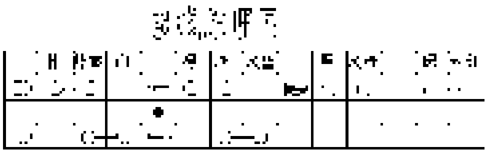

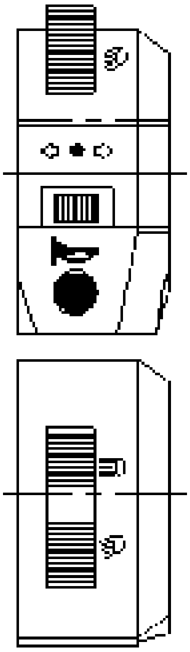

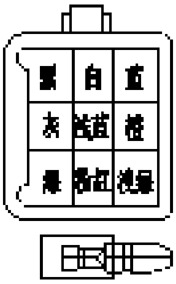

Inspection and Maintenance of Engine

List of Engine Fastener Torque Value

S/N	Inspection Items	Diameter of Thread	Required Moment of Force (N.m)
1	Positioning piece bolt torque (five-star plate)	M6	10～15
2	Positioner mounting bolt torque (Positioning wheel)	M6	10～15
3	Oil filter lock nut torque	M16	45～55
4	Clutch lock nut torque	M16	45～55
5	Oil strainer tightening torque	M36	20～28
6	Cylinder head nut torque	M8	25～35
7	Starting clutch bolt	M8	25～32
8	Valve adjustment nut torque	M6	13～17
9	Spark plug torque	M12	15～20
10	Conductor press plate bolt torque	M6	8～12
11	Box closing screw	M6	10～15
12	Oil pump mounting screw	M6	6～10
13	Rotor cover screw	M5	4～6
14	Clutch cover bolt	M6	10～15
15	Bearing thrust bolt torque	M6	8～12
16	Sprocket bolt torque	M6	10～15
17	Gear switch screw	M4	1～3
18	Magneto stator bolt	M6	5～8
19	Trigger coil bolt	M5	4～6
20	Magneto rotator fixing bolt torque	M10	40～50
21	Magneto cover bolt	M6	10～15
22	Starter motor bolt	M6	8～12
23	Cylinder block side bolt	M6	8～12
24	Intake manifold bolt torque	M6	8～12
25	Gear chamber cover bolt	6	8～12
26	Cylinder head cover bolt	M6	8～12
27	Left trademark cover screw	M6	8～12
28	Left trademark cover screw	M6	8～12
29	Clutch cable bracket bolt torque	M6	8～12
30	Timing driven sprocket screw	M6	10～15
31	Tensioning strip bolt	M8	10～15
32	Tensioner bolt	M6	8～12

33	Re-tightening torque of the valve cover	M45	15～20
34	Starting shaft limit bolt	M12	25～30
35	Bearing retainer plate and press plate tightening torque	M6	8～12
36	Balance shaft bearing press plate fastening torque	M6	8～12
37	Balance shaft nut tightening torque	M16	25～35

Lubricating System Diagram

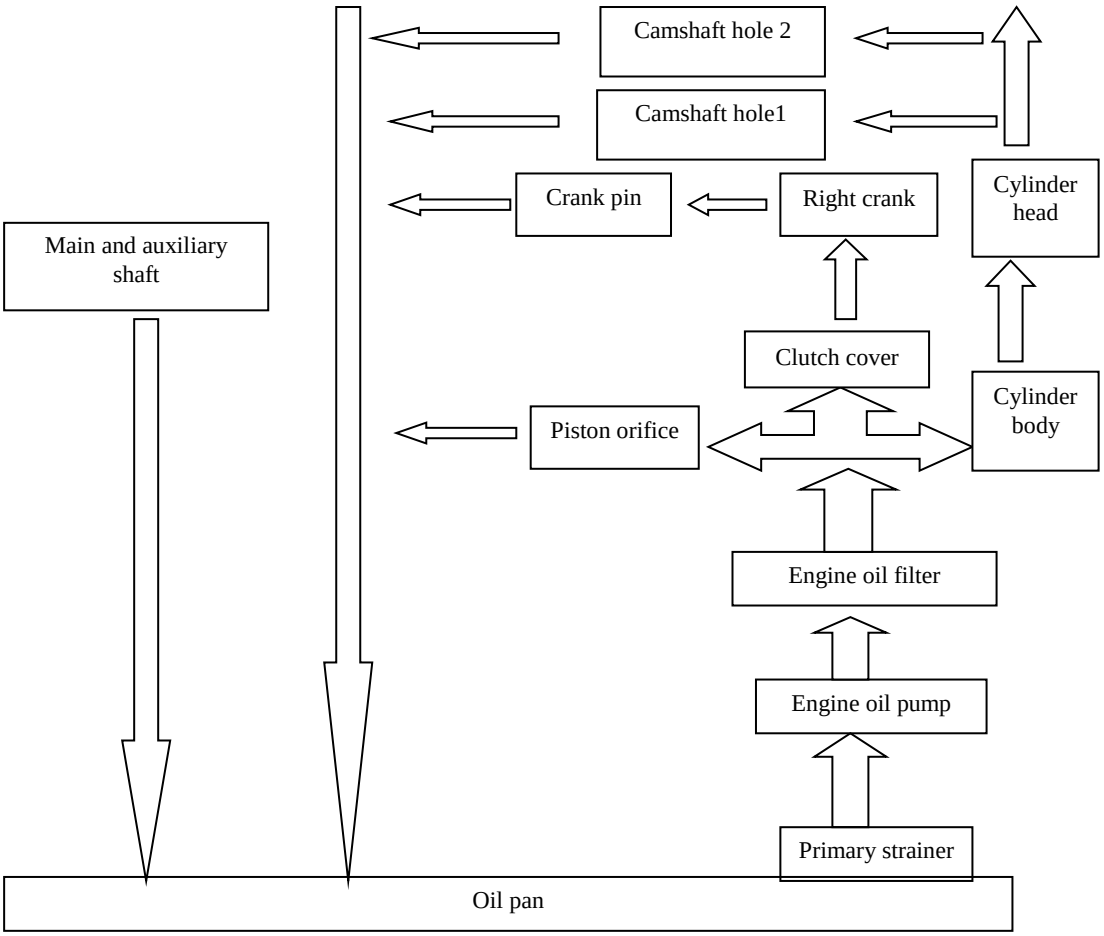

IX Lubricating system

9.1 Service Data

Function of lubricating system:

Engine lubricating system is to supply lubrication oil to friction surface of engine elements,

turning the dry friction on the surface into liquid friction between lubrication oil particles, thus mitigating part wearing, cooling down parts with high thermal load, absorbing impact from bearing and the elements and consequently reducing noises, increasing tightness between cylinder ring and wall, and cleaning and taking away foreign matters from surface of parts.

Precautions:

After engine oil pump is disassembled, carefully clean its parts and purge the surface with high-pressure gas.

To disassemble engine oil pump, it is important to prevent any foreign matter from falling into crankcase.

Standard Value and Allowable Limit of Reference Items

Item			Standard	Allowable limit
Engine oil capacity	For changing oil		1L	-
	For disassembly		1.2L	-
Pump rotor	Radial stroke between inner and outer rotors	Oil pressure pump	0.025-0.175	0.23
		Oil suction pump	0.025-0.175	0.23
	Stroke between outer rotor and pump	Oil pressure pump	0.11-0.163	0.22
		Oil suction pump	0.11-0.163	0.22
	Rotor face-to-face stroke	Oil pressure pump	0.05-0.11	0.15
		Oil suction pump	0.05-0.11	0.15

9.2 Fault Diagnosis

Engine oil decreases

Engine oil is consumed naturally.

Engine oil leakage

Engine damaged

No or too low oil pressure

Oil circuit clogged.

9.3 Engine Oil Pump

Disassembly

Remove the right cover, remove the clutch, remove retainer ring, remove the oil pump gears and oil pump gear transition gears;
Remove the fixing pin, remove screws, remove the oil pump cover, and break down oil pump;

Assembly

Assemble in the reverse order of disassembly.

Inspection

Check radial stroke between inner and outer rotors
Allowable limit: 0.15 mm

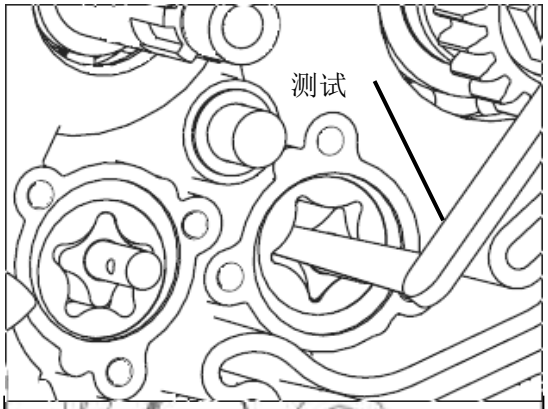

Check stroke between outer rotor and pump body.
Allowable limit: 0.15 mm

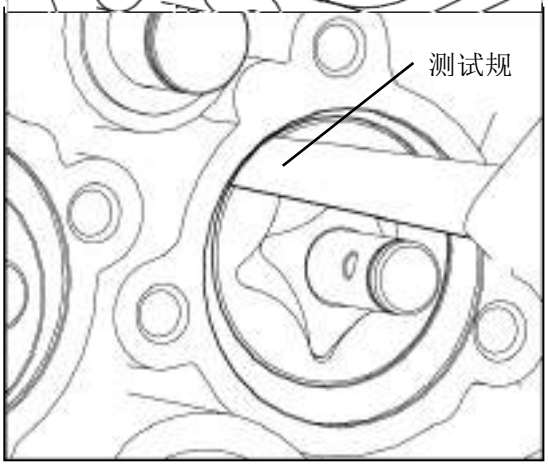

Check rotor end surface stroke
Allowable limit: 0.15 mm

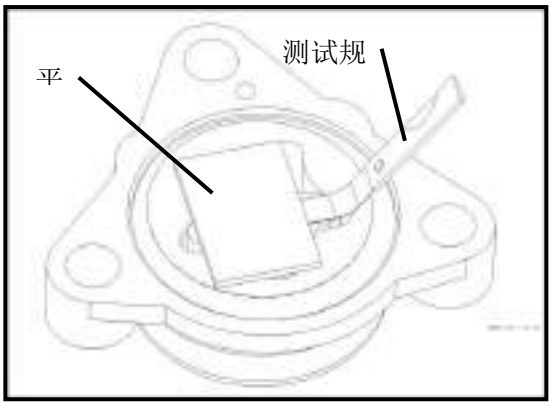

Cylinder head

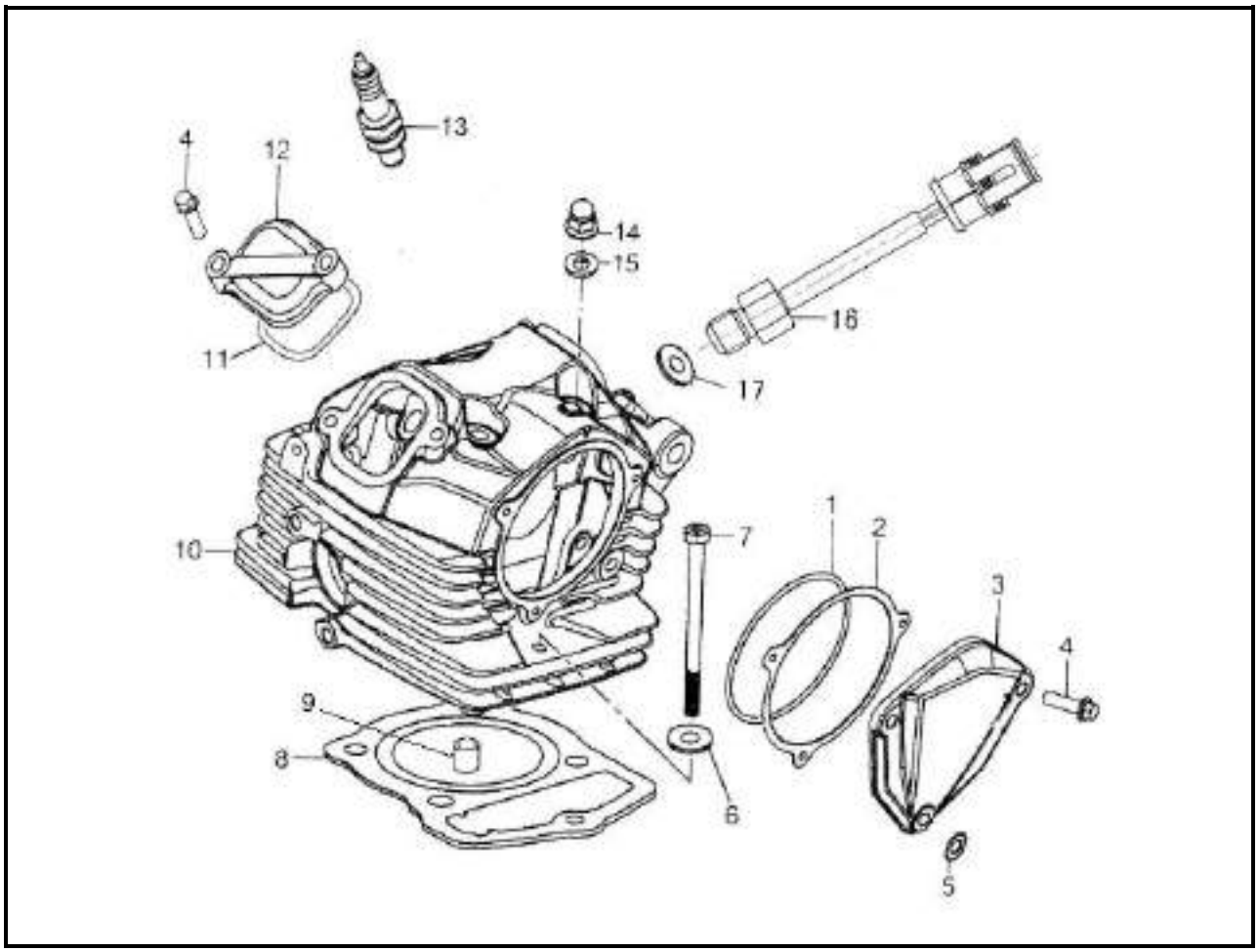

S/N	Name	S/N	Name
1	O-ring	10	Cylinder head composition
2	Cylinder head left cover gasket	11	O-ring
3	Cylinder head left cover	12	Observation hole cover
4	Hexagon flange bolt	13	Spark plug
5	Crankcase right cover screw washer	14	Cap nut
6	Plain washer (copper)	15	Plain washer
7	Cross recessed hexagon screw	16	Engine temperature sensor
8	Cylinder head seal gasket	17	Metal plain washer
9	Locating pin		

10.1 Service Data

Function of cylinder head:

It is used to seal cylinder and form the combustion chamber along with the piston in order to withstand high-temperature and high-pressure combustible gas. Through the valve system, the cylinder head intakes and discharges gas.

Precautions:

To ensure seal between the cylinder head and cylinder body, the head withstand large locking tension force from bolt. Locking-tension value: 30Nm.

All parts must be cleaned before being checked, and purged with high-pressure air.

Standard Value and Allowable Limit of Reference Items Unit: mm

Item			Standard	Allowable limit
Valve Valve guide	Valve stroke	Intake	0.04-0.06	-
		Discharge	0.09-0.11	-
	OD, valve rod	Intake	4.975-4.990	4.955
		Discharge	4.955-4.970	4.958
	OD, valve rod	Intake	5-5.012	5.03
		Discharge	5-5.012	5.03
	Clearance of valve rod and valve guide	Intake	0.01-0.037	0.065
		Discharge	0.03-0.057	0.082
	Width, valve base	Intake	1.1-1.3	1.6
		Discharge	1.0-1.2	1.6
Valve spring	Free length	Intake	41.8	39.5
		Discharge	41.8	39.5
Camshaft	Stroke of camshaft and cylinder head		0.02-0.054	0.08

10.2 Fault Diagnosis

Low compression pressure
Bad valve stroke adjustment
Valve burned or bent
Bad valve base air tightness
Air leakage from cylinder head gasket
Poor installation of spark plug
Abnormal noise in cylinder head
Bad valve stroke adjustment
Valve spring damaged
Too high compression pressure
Too much carbon deposits in combustion chamber

10.3 Cylinder Head

Disassembly

Loosen the mounting bolts and remove the cylinder head cover (swing arm and its shaft).

Remove the tightener, loosen chain and take down the camshaft.

Camshaft measuring

Measure the height of the cam.

Allowable limit: intake: 31.336 mm

Discharge: 31.241 mm

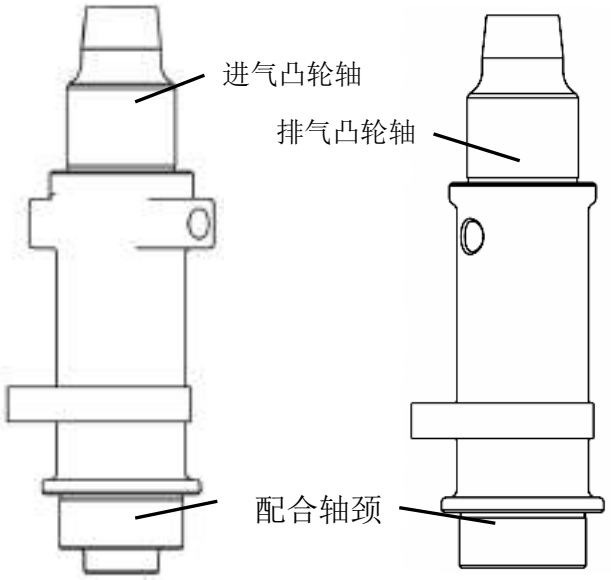

Remove the screws, nuts and remove the cylinder head.

Remove the tappet, compress the valve spring with a valve spring compression tool, and remove valve cock clamp..

Remove the valve adjustment shims, valve springs, valve spring upper and lower seats, and valves.

Decomposition of valve

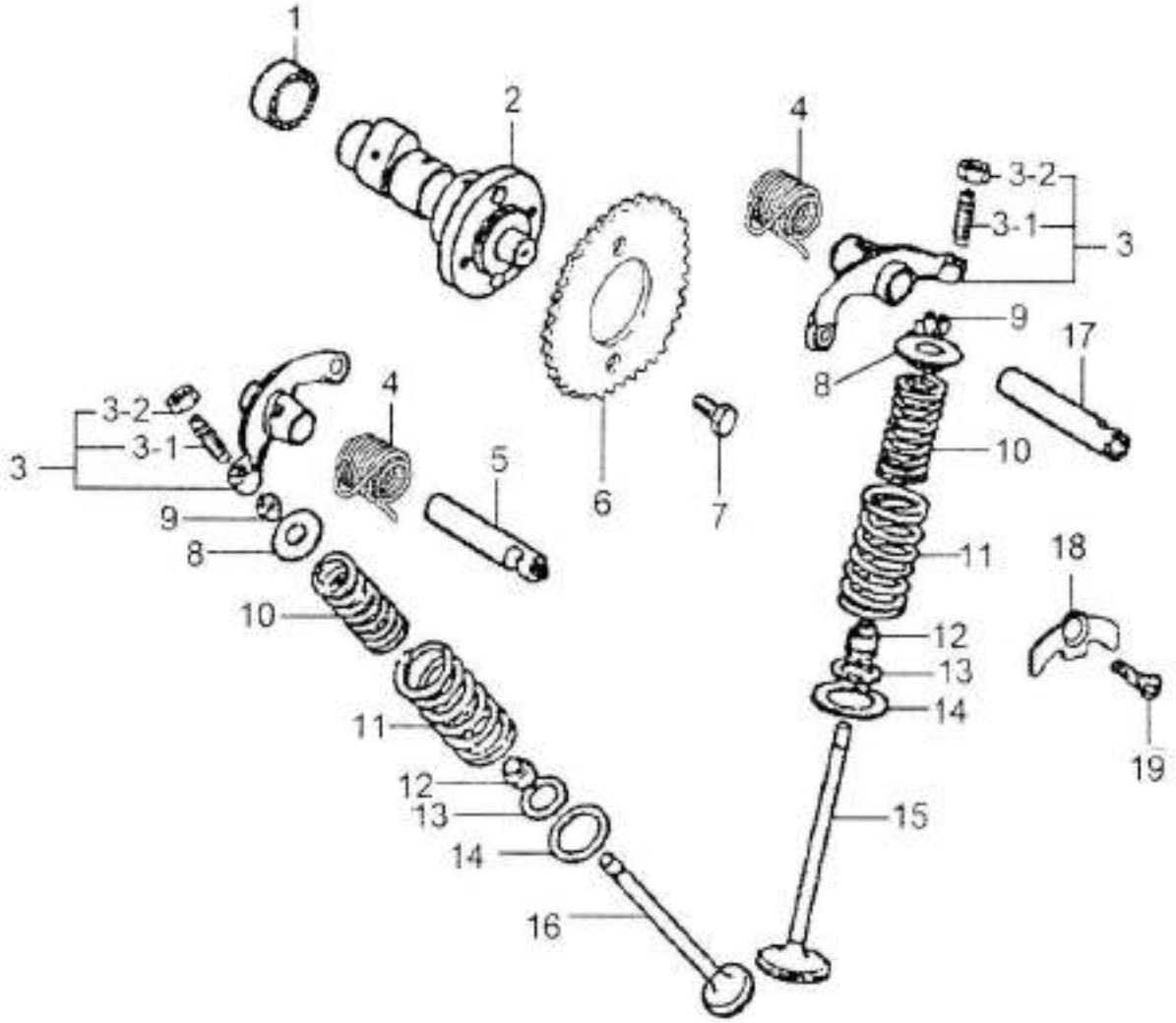

S/N	Name	S/N	Name
E07-1	Single-shield ball bearing	E07-10	Valve inner spring
E07-2	Camshaft composition	E07-11	Valve outer spring
E07-3	Valve rocker composition	E07-12	Oil seal
E07-3-1	Tappet adjustment screw	E07-13	Adjusting washer
E07-3-2	Valve lash lock nut	E07-14	Adjusting washer
E07-4	Torsion spring	E07-15	Intake valve
E07-5	Exhaust valve rocker arm shaft	E07-16	Exhaust valve
E07-6	Camshaft sprocket	E07-17	Intake valve rocker shaft
E07-7	Hexagon bolt	E07-18	Rocker shaft baffle
E07-8	Valve spring plate	E07-19	Cross recessed screw
E07-9	Valve locking clip		

Inspection

Clear carbon deposits on the cylinder cover.

If the flatness exceeds the allowable limit, place fine sands on a flat board, engage the interfacing surface with the board, and then grind in a “8” shape.

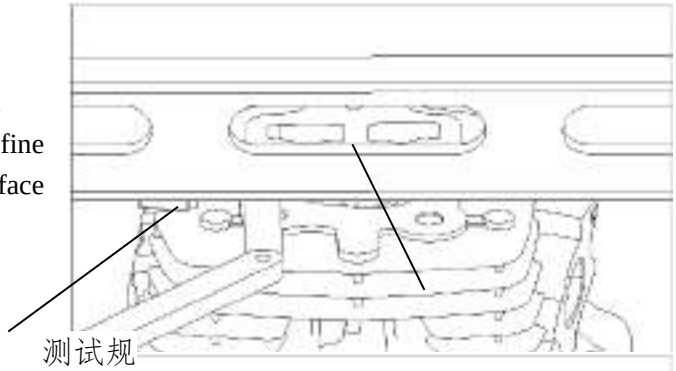

Measure free length of valve spring.

Free length of the inner valve spring: 39mm

Free length of the outer valve spring: 41.8mm

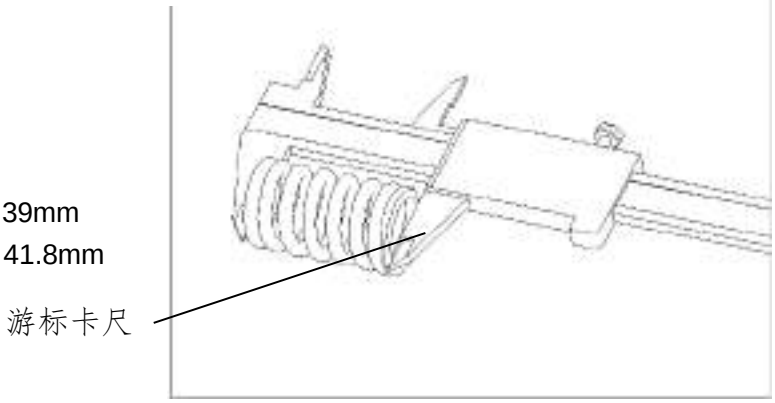

Measure the outer diameter of valve rod.

Allowable limit: air inlet: Φ4.955 mm

Air exhaust: Φ4.948 mm

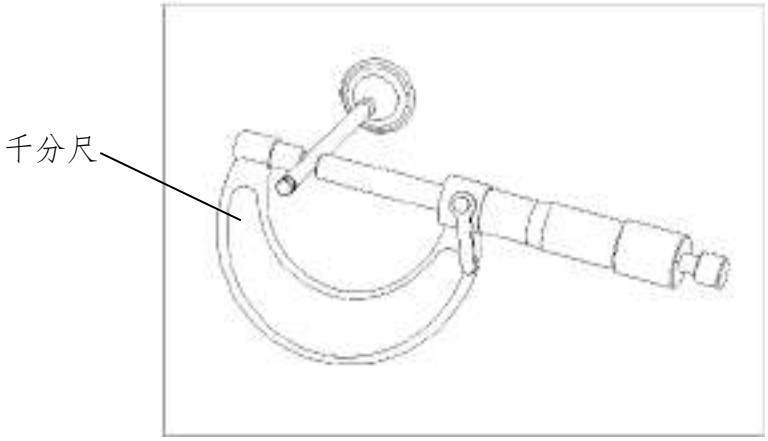

Check the valve guide. Prior to check, use a reamer to eliminate carbon accumulated within the guide.

Attention: the reamer shall be turned clockwise and do not turn it counterclockwise.

Measure the inner diameter of valve guide.
Allowable limit:
Intake/discharge: Φ5.03 mm
Allowable limit for stroke between valve rod and its guide:
Intake: 0.04mm
Discharge: 0.09mm

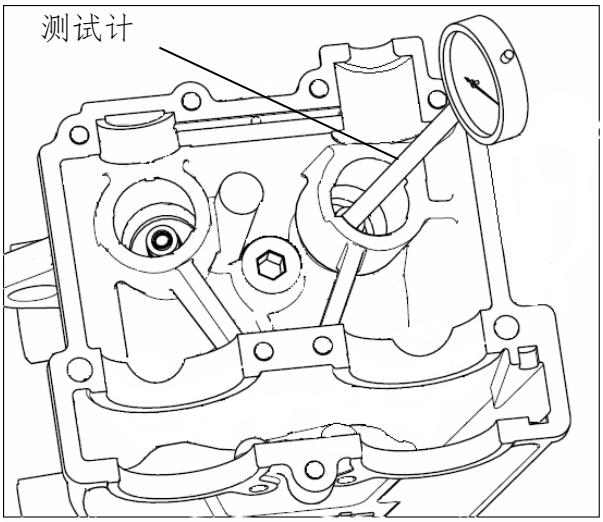

Valve Guide Replacement

Attention: If stroke between the valve and its guide, replace the guide. After the guide is replaced, trim surface of the valve washer.
Place the guide into the freezing chamber of electrical refrigerator for one-hour cooling.
Heat the cylinder head to 100-150℃ with an electric oven or thermal oven.
Fix cylinder head, and use the guide disassembly tool to remove the guide out of the head.

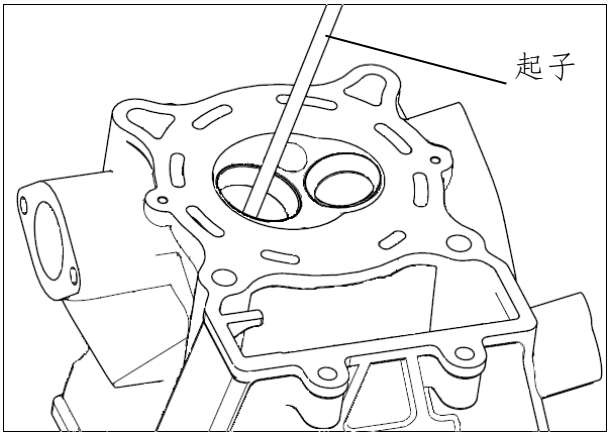

Place a new O ring onto the new guide.
Fit the guide from the head top.
Attention: Do not damage the head when fit the valve.

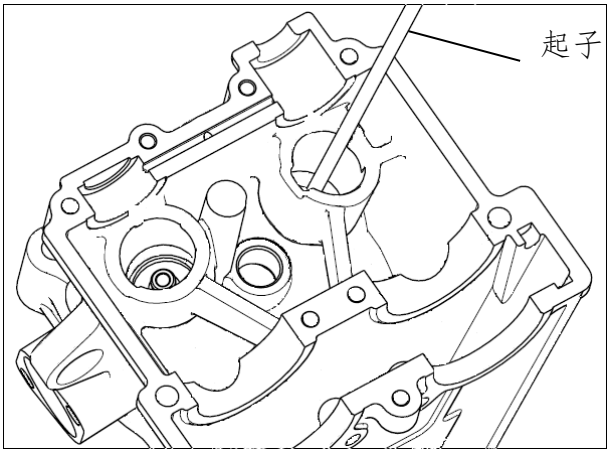

After the guide is inserted, trim it with a reamer.
Attention: Inject right amount of cutting oil when cut with the reamer. The reamer rotates clockwise.

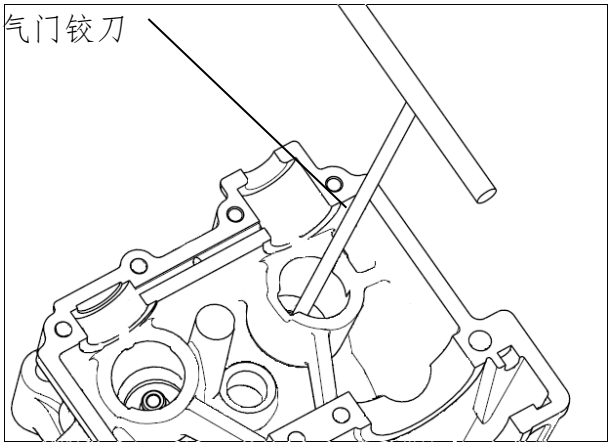

Clear carbon accumulated within the combustion chamber and valve, and thoroughly clean the intake and discharge valves.
Check width of valve contact surface (valve race width).
Allowable limit: Intake/discharge: 1.6mm.

Valve Race Fixing and Adjustment
Use a 45° cutter to clear coarse or uneven parts on the surface of valve race.
Notes: apply a layer of transparent or Prussian blue coating across the race for more visibility.

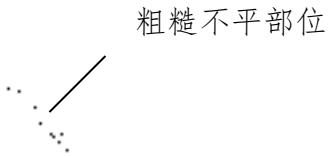

Use a 30° cutter to clear 1/4 of external end of race.

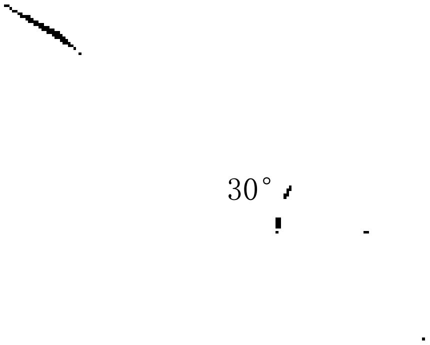

Use a 70° cutter to clear 1/4 of bottom of race. Remove the cutter and check the processed locations.

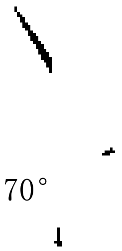

Use a 45° trimming cutter to grind the race so that it meets the suitable width.

Make sure all caves and unevenness are eliminated.

Standard valve base width: Intake: 1.1-1.3 mm

Discharge: 1.0-1.2mm

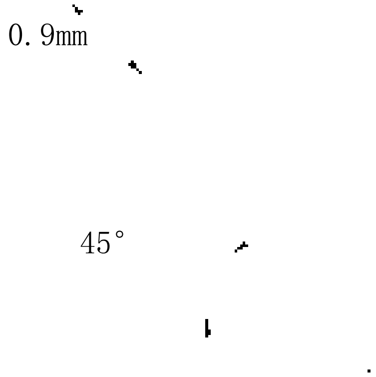

If the contact is higher part in the valve, use a 32° cutter to lower the race to its minimum height.

If the contact is lower part in the valve, use a 60° cutter to raise the valve base to its minimum height.

Use a 45°trimming cutter to trim the valve base so that it meets the required specifications.

After the valve base is ground, apply polishing agent across the valve surface to polish the valve gently.

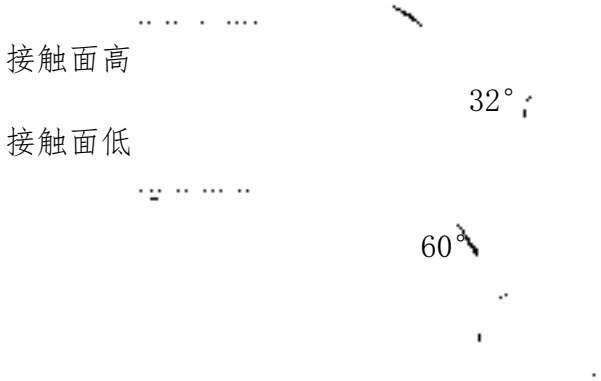

Installation

Installation is executed in the reverse sequence of disassembly.

Attentions:

To install the valve spring, it shall be such installed that the end with smaller spring pitch faces the combustion chamber.

To install valve locking clamp, compress the spring with its compression tool.

To install the valve, apply a right amount of engine oil across the valve rod, and then place the rod into the guide.

Valve lash adjustment

Install the cylinder cover hood special for valve lash adjustment, measure the clearance between the cam base circle and the tappet with a test gauge.

Intake valve: 0.04-0.06mm

Exhaust valve: 0.09-0.11mm

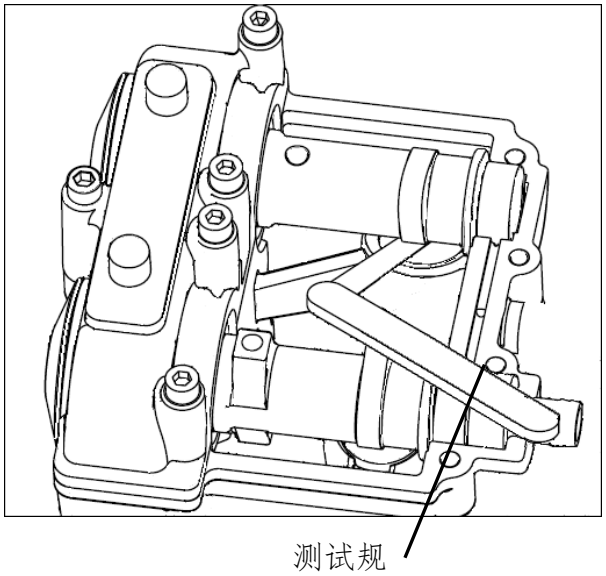

Cylinder Block and Piston

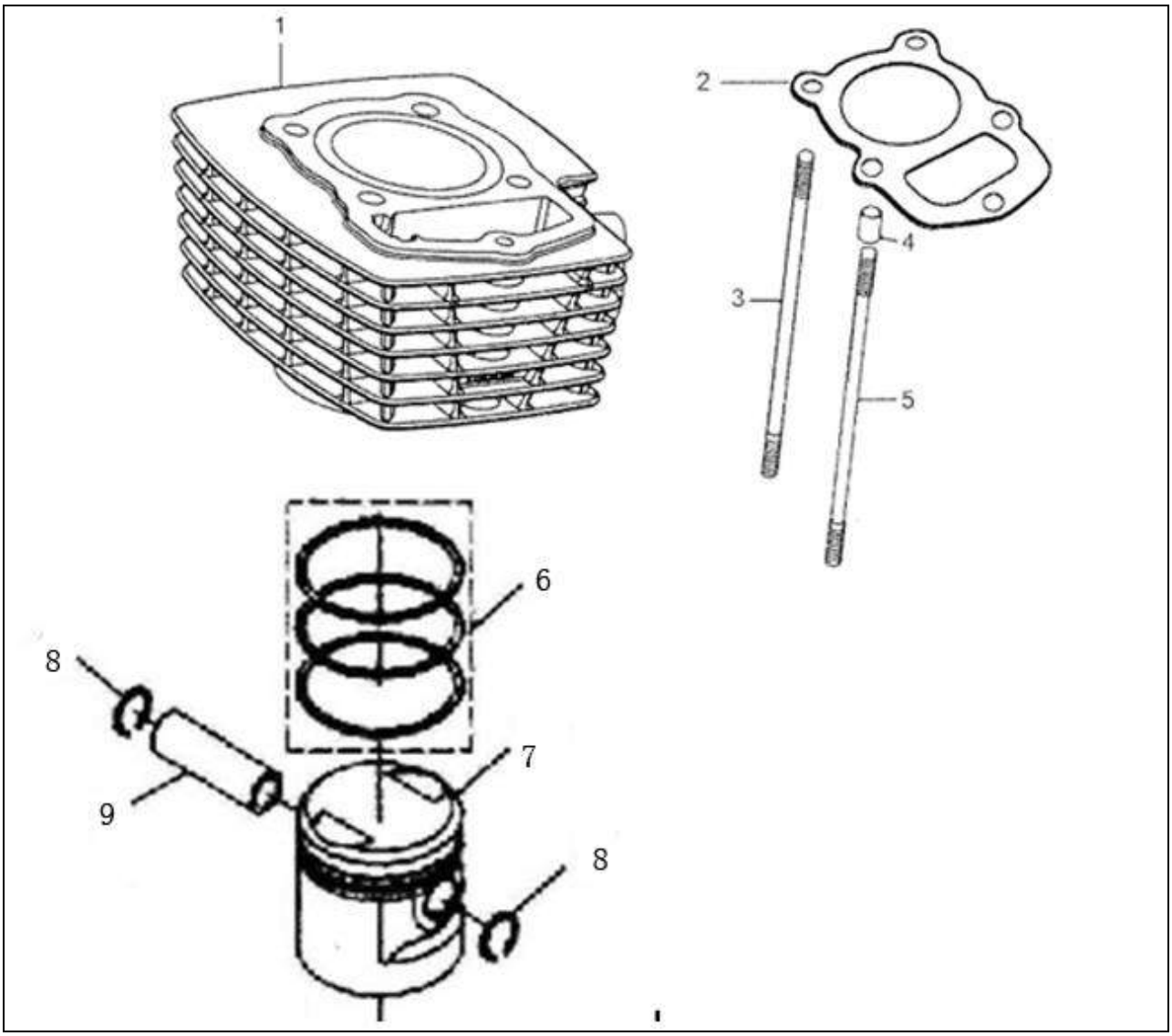

S/N	Name	S/N	Name
1	Cylinder block composition	6	Piston ring combination
2	Cylinder block gasket	7	Piston
3	Cylinder stud B	8	Retainer ring for holes
4	Locating pin	9	Piston pin
5	Cylinder stud		

XI Cylinder Block and Piston

11.1 Service Data

Function of cylinder block:

It offers a space for gas compression, combustion and expansion, and guides in piston motion. It also transfers some of heat to surrounding cooling media.

Function of piston:

1．Withstand pressure as a result of combustion of combustible mixed gas, and transfer such pressure to the connecting rod to drive the crankshaft.

2．Form the combustion chamber along with the cylinder cover.

Precautions

All parts must be cleaned before being checked, and purged with high-pressure air.

Standard Value and Allowable Limit of Reference Items

Item			Standard value	Allowable limit
Cylinder	ID		57.3-57.301	57.351
	Cylindricality		0.007	0.027
	Roundness		0.005-0.007	0.025
	Flatness		0.05	0.055
	Piston OD (measuring point)		57.270-57.275	57.26
	Piston pin hole ID		14.002-14.008	14.04
	Piston pin OD:		13.996-14	13.966
	Stroke between piston and piston pin		0.002-0.012	0.062
	Stroke between piston ring and ring slot	Ring 1	0.03-0.07	0.12
		Ring 2	0.03-0.07	0.12
	Piston ring closure stroke	Ring 1	0.15-0.3	0.4
		Ring 2	0.25-0.4	0.5

		Oil ring	0.15-0.6	-
	Piston pin end ID		13.990-14.017	14.067
	Stroke between connecting rod and piston pin		0.010-0.021	0.089

12.2 Fault Diagnosis

Low compression pressure

Piston worn, burnt or broken

Cylinder and piston worn or damaged

Gasket damaged and air leakage between crankcase and gas

Too high compression pressure

Too much carbon deposits in combustion chamber

White smoke from discharge duct

Piston ring worn or damaged

Cylinder and piston worn or damaged

Abnormal noise from piston

Cylinder, piston and piston ring damaged

Piston pin hole and piston pin worn

12.3 Cylinder Block

Disassembly

Remove the cylinder block.

Inspection

Check wearing of inner wall of cylinder.

If serious wearing is found, replace it.

Remove the gasket and locating pin.

Piston

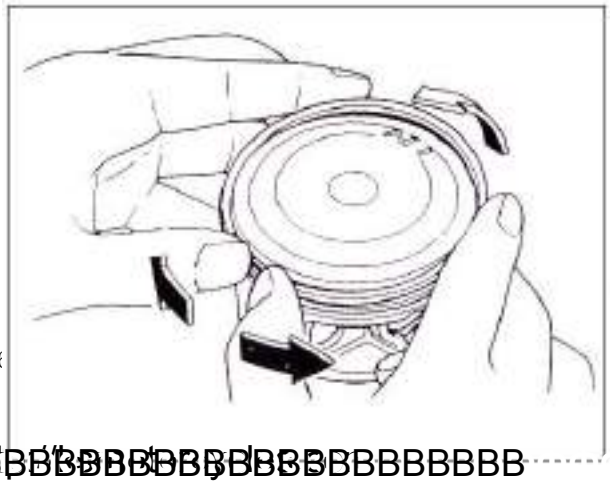

Disassembly

Remove the piston retaining ring.

Attention: During removal, do not fall the retaining ring into crankcase.

Take out the piston pin and remove the piston.

Remove the piston ring.

Check piston, piston pin and piston ring.

Attentions

Do not break or damage the piston ring.

Clear the carbon deposits within the piston ring.

Install the piston ring.

Measure stroke between the piston ring and its slot.

Allowable limit: Ring 1: 0.09mm

Ring 2:: 0.12 mm

Remove the piston ring and install the piston rings at the bottom of cylinder.

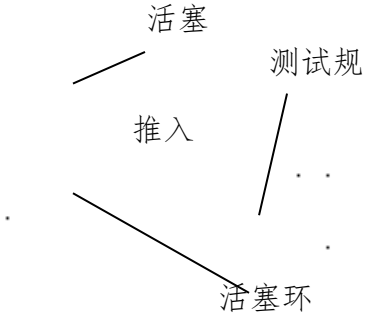

Attentions:

Use the piston head to press the piston ring into the cylinder.

Measure piston ring closure stroke

Allowable limit: Ring 1: 0.4 mm

Ring 2: 0.5 mm

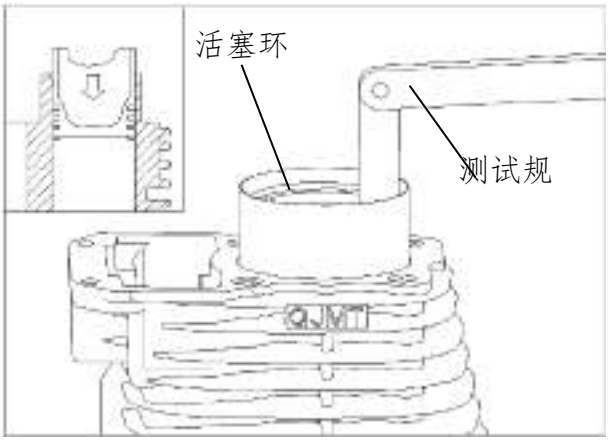

Measure piston pin hole ID.

Allowable limit: 14.04mm.

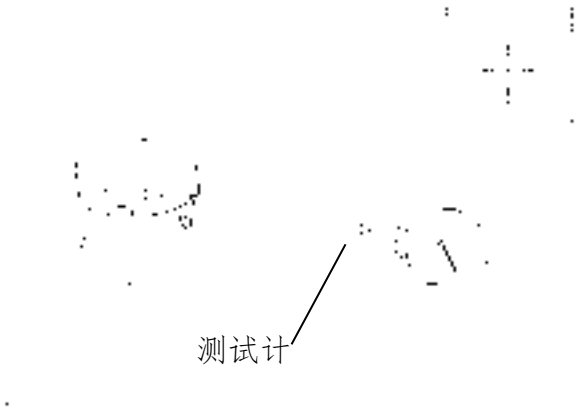

Measure piston pin hole OD.

Allowable limit: Φ13.966mm.

Stroke between piston pin hole and piston pin

Allowable limit: 0.062mm

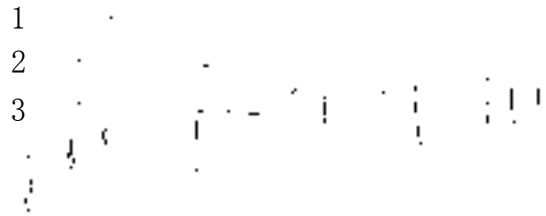

Measure piston OD.

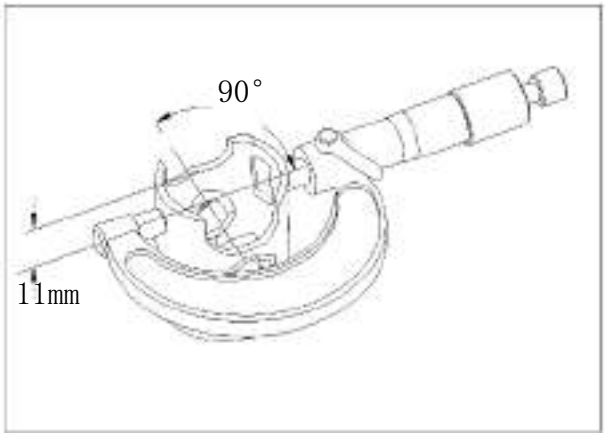

Attention:
Measurement is made at such position as to form 90° with piston pin and around 11mm from the piston skirt bottom.
Allowable limit: Φ57.26mm

Inspection of cylinder inner wall scratch and wearing.

Attentions:
Measure cylinder inner diameter at upper, middle and lower positions at 90° with the piston pin.
Allowable limit: Φ57.351mm
Measure the stroke between the cylinder and piston, and the maximum value prevails.
Allowable limit: 0.07mm

Measure the roundness of cylinder inner wall (difference between X ID and Y ID).
Allowable limit: 0. 01mm
Measure the cylindricality of cylinder inner wall (ID difference at the upper, middle and lower positions between X and Y).
Allowable limit: 0. 01mm

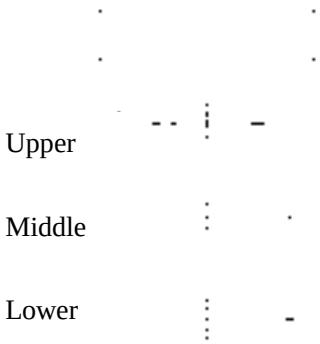

Check the flatness of cylinder surface.
Allowable limit: 0. 05mm

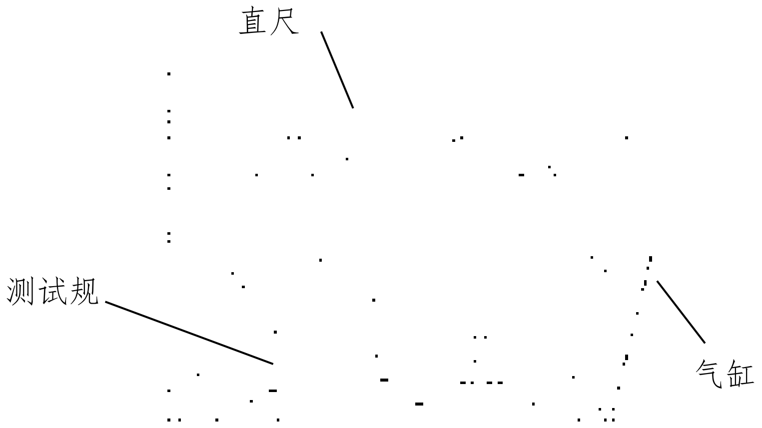

Measure connecting rod small end ID.
Allowable limit: Φ14.067mm

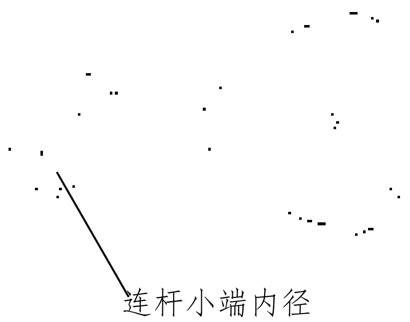

Installation

。
Install locating pin.
Apply engine oil on the piston rings and pistons, and install the piston rings at their positions with the marking face upward.

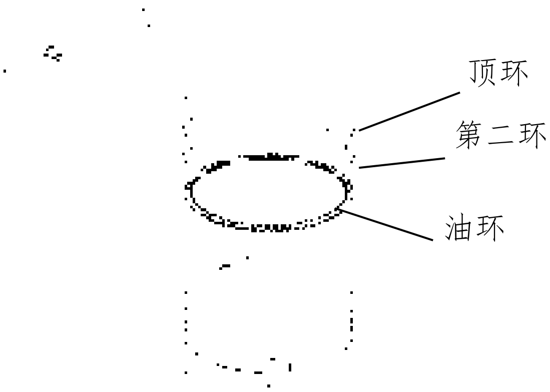

Attentions:
Do not scratch the piston and do not break the piston ring.
After the piston ring is installed, the piston ring is capable to rotate within the piston slot freely.

Clear all of gaskets attached on the crankcase.

Attentions:

Any foreign matter shall not fall into the crankcase.
Install piston, piston pin and its retaining ring.

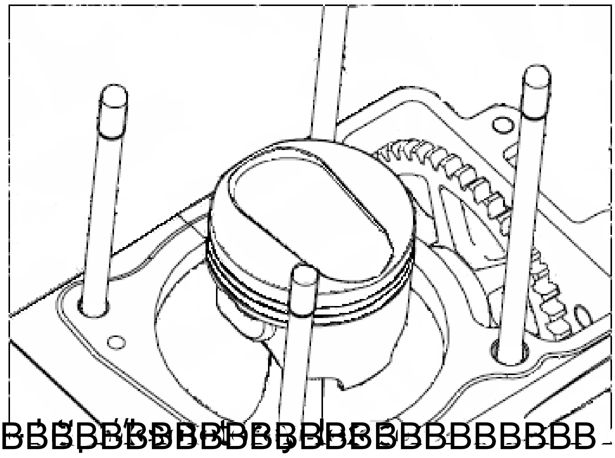

Attentions:

Install the larger end of the groove at the top of the piston toward the intake valve.

Installation of Cylinder

Install the gasket and locating pin on the crankcase.
Apply engine oil across the cylinder inner wall, piston and piston ring.
Care shall be excised to locate the piston ring into the cylinder.

Attentions:

Do not damage piston ring.

XII Crankcase

12.1 Service Data

Function of crankcase:

It is a bearing component in the engine. It is provided to support the crankshaft, clutch, gearbox, cylinder block and cover, withstand impact from combustion and inertia force due to crankshaft connecting rod mechanism, and it also forms some enclosed spaces (oil-seal and gas-seal).

Suspension hole is provided on the crankshaft, and it is connected with the suspension hole on the motorcycle so that the engine is connected with frame and other parts.

Precautions

Crankcase is thin-wall casting, so it is required to avoid impact during operation for fear of deformation or breaking.

All parts must be cleaned before being checked, and purged with high-pressure air.

Prior to any operation, release lubricating oil from the crankcase.

Standard Value and Allowable Limit of Reference Items Unit: mm

Item		Standard value	Allowable limit
Crank linkage assembly, clutch	Right-left stroke of connecting rod large end	0.1-0.30	0.5
	Radial stroke of connecting rod large end	0.002-0.010	-
	Run-out	0.03	0.03
	Friction plate thickness	2.8-2.9	2.8-2.9
	Driven friction plate flatness	0.04	0.04
	Pressure spring length	30.4-31.6	30.4-31.6
	Needle bearing thickness	1.88-2	1.88-2
Shifting mechanism	Fork shaft outer diameter	11.976-11.994	11.95
	Fork bore diameter	12-12.018	12.05
	Fork thickness	4.993-5	4.7
	Shifting hub outer diameter	35.8-36	35.75
	Shifting hub lock slot width	7.1-7.2	7.35

12.2 Fault Diagnosis

Low compression pressure

Air leakage of crankcase

Engine overheating

Clutch slip

Poor lubrication

Shifting failure

Shift fork breakage or deformation

Fork pin breakage

Gear detent wear

Auto out-of-gear

Engaging claw wear, and edges become rounded

Transmission mechanism return spring deflation

Wear of the spline shaft spline teeth and sliding gear spline groove results in the occurrence of a greater axial force during the working of the gear.

Wear of shifting drum and fork

Abnormal sound from crankcase

Scattered or broken parts in crankcase

Automatic shutdown of engine

Clutch stuck

Shifting difficulties

Incomplete release of clutch

Malfunction of transmission pull-back spring

Shifting drum lock groove wear

12.3 Crankcase

Removal of crankcase left cover

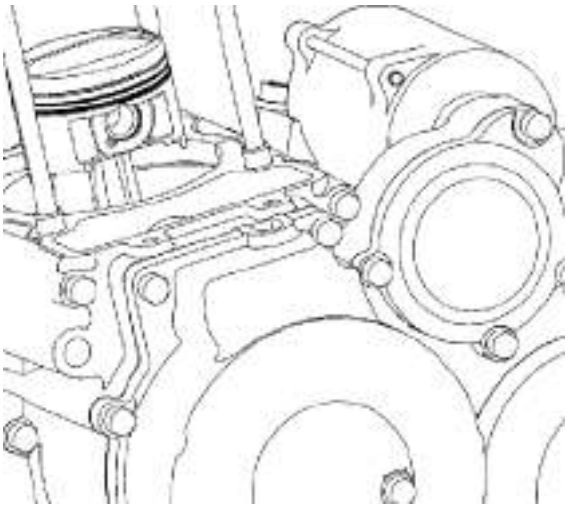

Loosen the starter motor fixing bolts and remove the starter motor.
Loosen the left cover fixing bolts and remove the left cover.

Use electric or pneumatic tools to loosen the flywheel lock nut.
Pull out the flywheel assembly (including star wheel), remove the starter motor idler gear.
Remove the gasket.

Removal of crankcase right cover

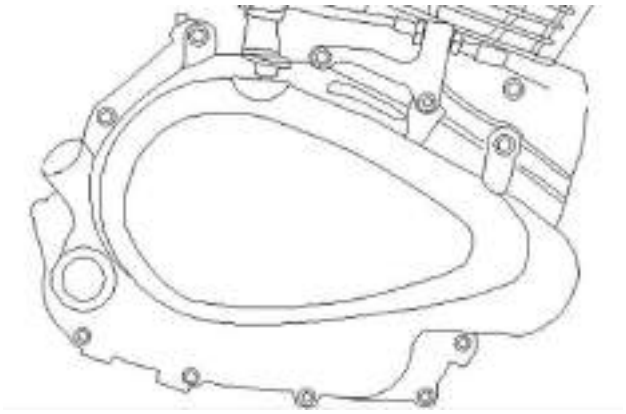

Loosen the fixing bolts and remove the crankcase right cover, gaskets, and locating pin.

12.4 Clutch

Disassembly

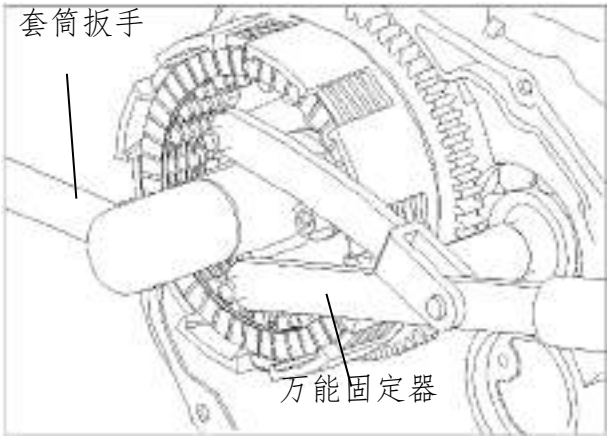

Loosen five pressure plate bolts by diagonal cross.
Disassemble the clutch spring, spring gasket, pressure plate, bearing washer, plane needle roller bearing, bearing seat and clutch sleeve.

Loosen the clutch lock nut with special tools, then remove the lock nut and washer.
Disassemble the clutch center support.
Disassemble the driving and driven friction plates of clutch.
Remove the parts as per the disassembly diagram.

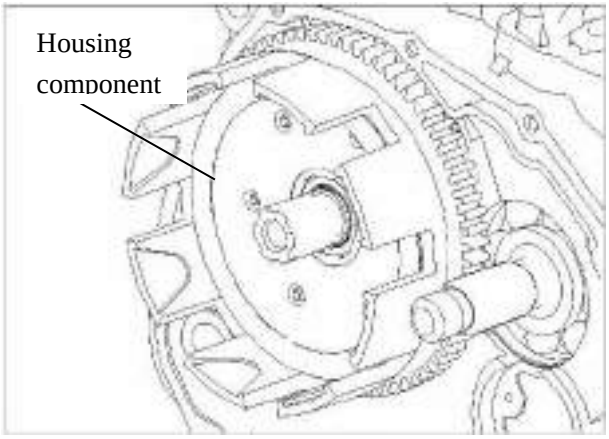

Remove the thrust washer.
Remove the housing component.

The clutch is assembled in the reverse order of removal.

Clutch Disassembly

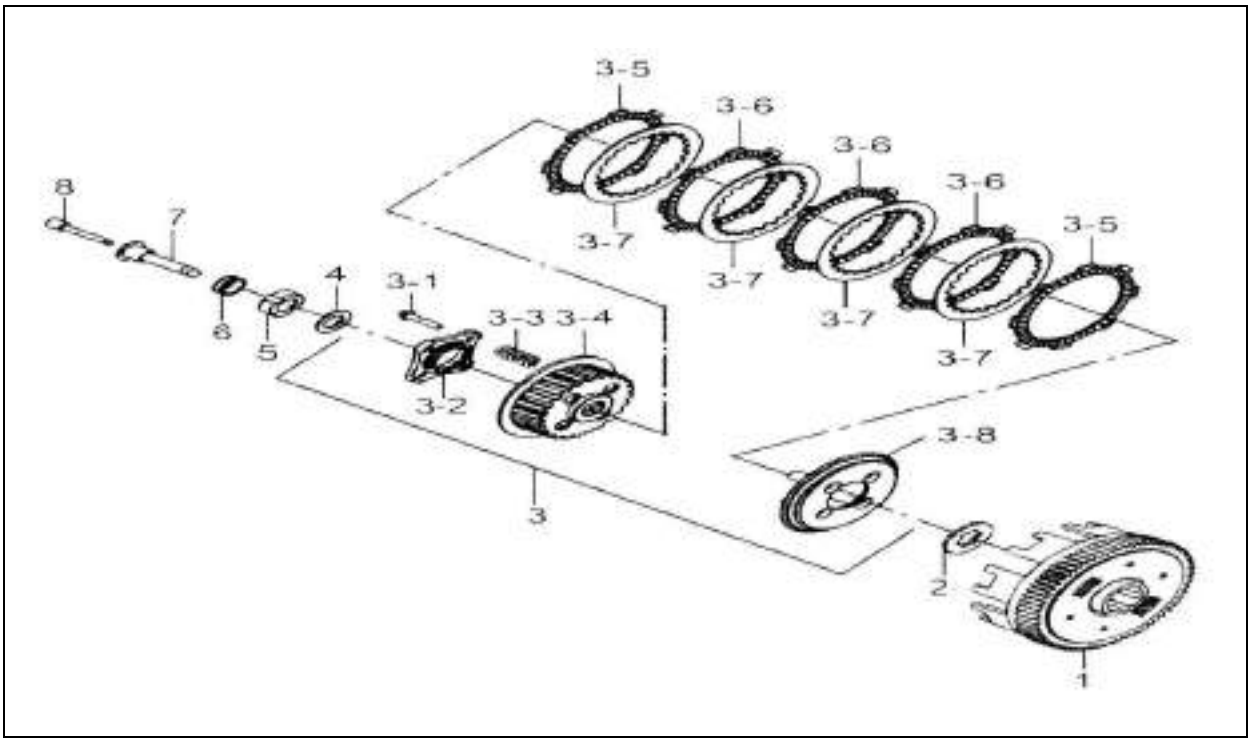

S/N	Name	S/N	Name
1	Primary driven gear assembly	3-6	Clutch driving plate
2	Clutch spline washer	3-7	Clutch driven plate
3	Clutch hub composition	3-8	Clutch compression disk
3-1	Hexagon flange bolt	4	Lock washer
3-2	Clutch putt disc	5	Lock nut
3-3	Clutch spring	6	Bearing 16003
3-4	Clutch hub	7	Clutch push block
3-5	Clutch driving plate	8	Clutch putt

Inspection

Check if there are burrs or damage in the shell components of the clutch, and get rid of them with a file. Replace the clutch if too much such work needs doing.

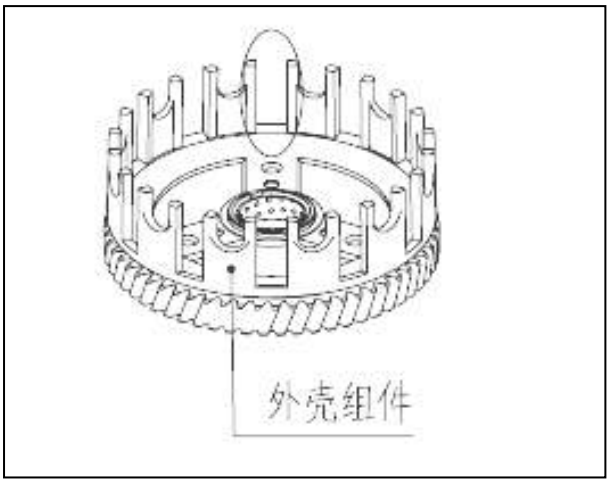

Check whether it is damaged in the dents of the pressure plate and the center bearing support. Replace it if it is damaged.

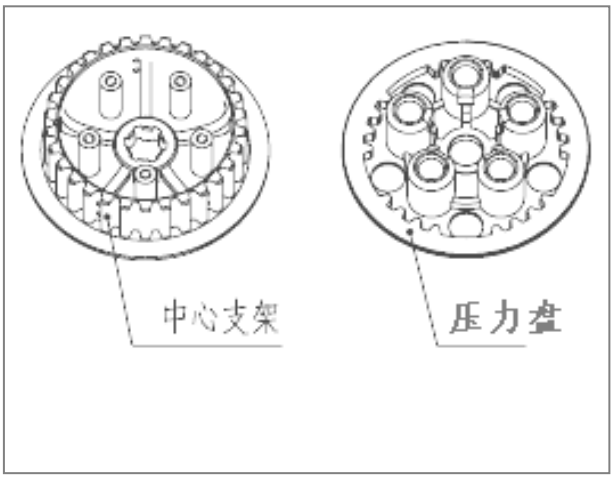

Measure the free length of the pressure spring.
Allowable limit: replace in case of below 29.7mm

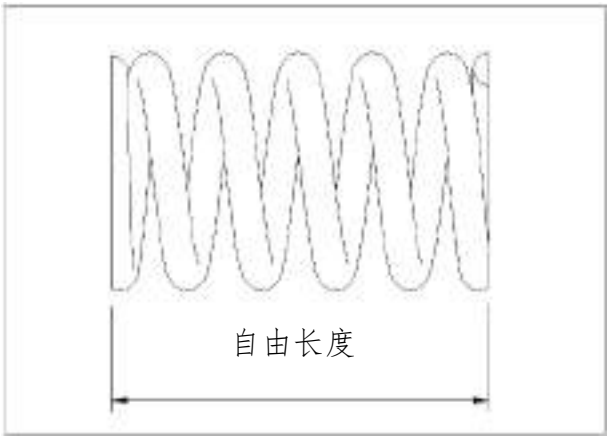

Measure the thickness of the friction disc with a vernier caliper.

Allowable limit: replace in case of below 2.5mm

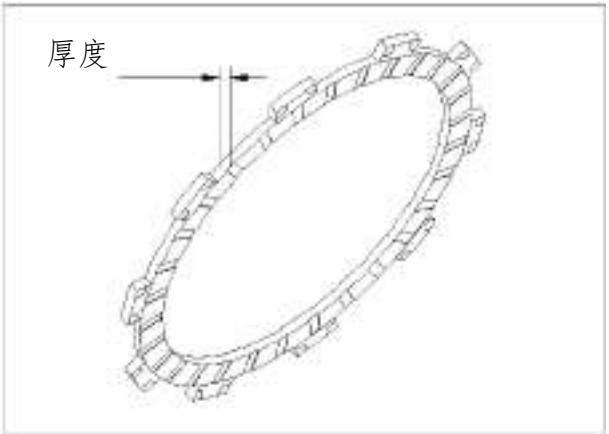

Measure the flatness of the driven friction disc with a plug gauge.

Allowable limit: replace in case of below 0.2mm

Measure the thickness of the plane needle roller bearing.

Allowable limit: replace in case of below 1.8mm

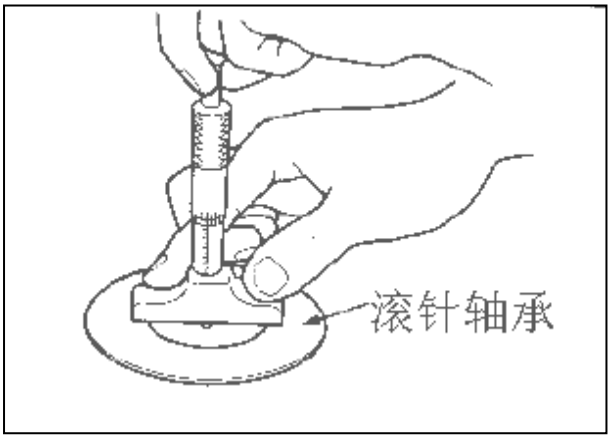

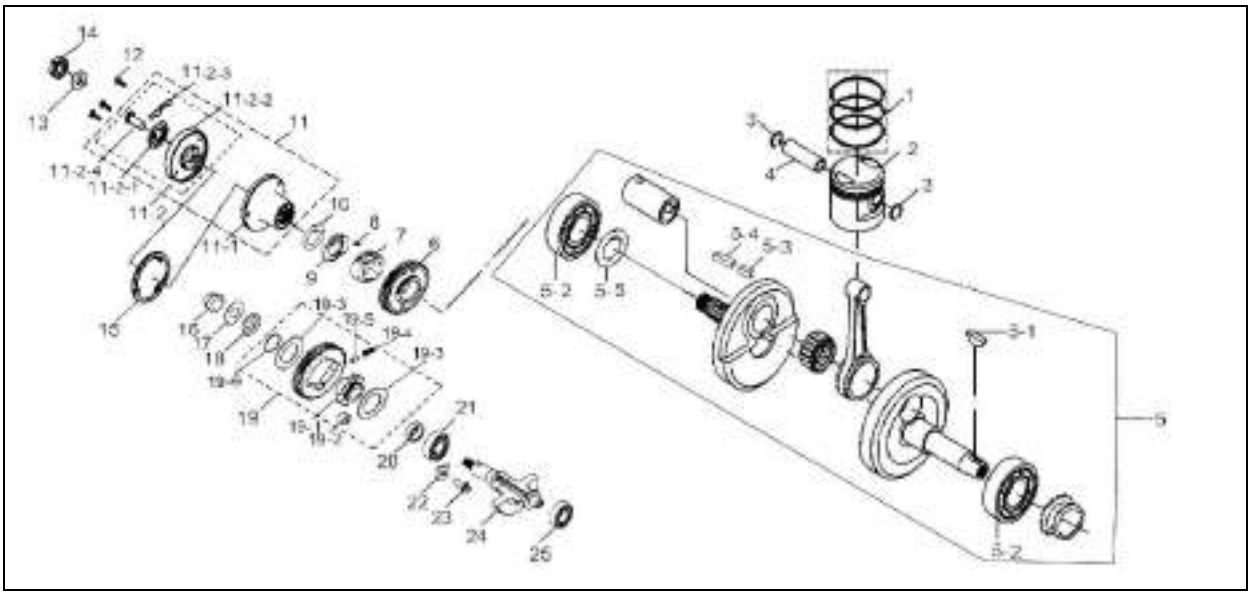

S/N	Name	S/N	Name
1	Piston ring combination	11-2-4	Oil tube
2	Piston	12	Cross recessed countersunk head screw
3	Retainer ring for holes	13	Lock washer
4	Piston pin	14	Lock nut
5	Crankshaft assembly	15	Rotor cover gasket
5-1	Woodruff key	16	Hexagon flange bolt
5-2	Bearing	17	Washer
5-3	Flat key	18	Wave washer
5-4	Flat key	19	Balance shaft driven gear combination
5-5	Crankshaft adjustment shims	19-1	Balance shaft driven gear inner ring
6	Balance shaft driving wheel	19-2	Balance shaft gear cushion
7	Primary driving gear	19-3	Adjusting washer
8	Primary driving gear spring	19-4	Compression spring
9	Primary driving gear 2	19-5	Straight pin
10	Lock washer	19-6	Circlips for shaft
11	Oil filter combination	20	Bushing
11-1	Oil filter rotor	21	Spherical bearing
11-2	Oil filter cover assembly	22	Balance shaft bearing plate
11-2-1	Oil tube spring	23	Hexagon flange bolt
11-2-2	Rotor cover	24	Balance shaft
11-2-3	Safety pin	25	Spherical bearing

Crankcase cover group

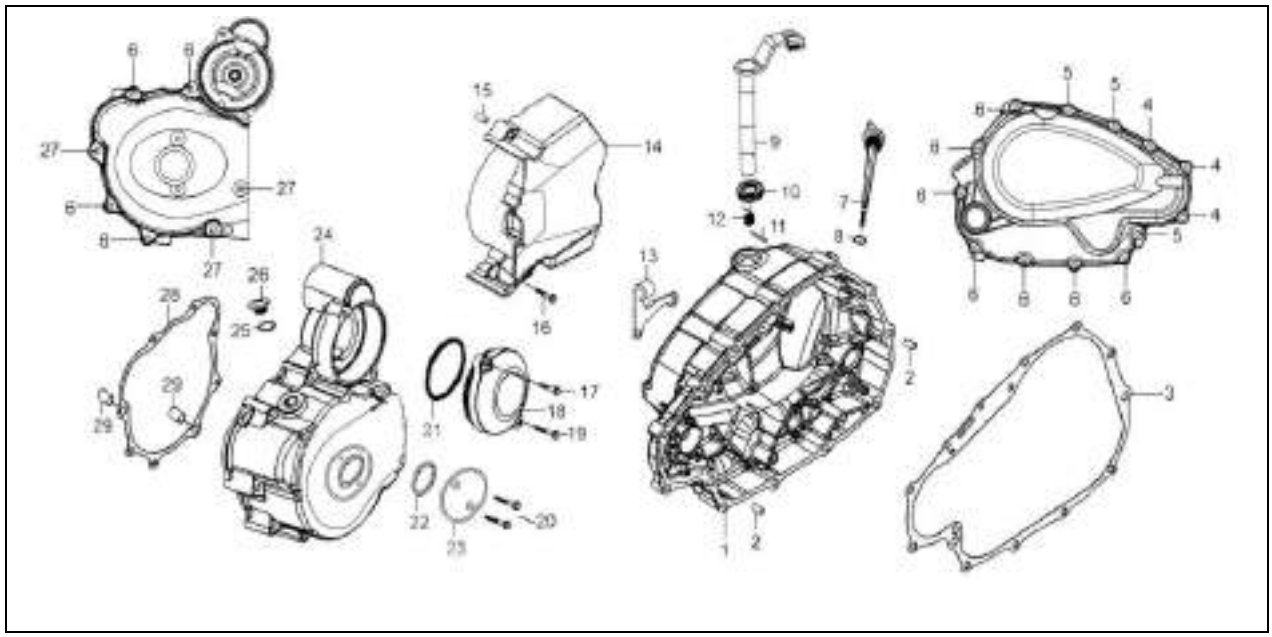

S/N	Name	S/N	Name
1	Clutch cover composition	16	Hexagon flange bolt
2	Locating pin	17	Hexagon flange bolt
3	Clutch cover gasket	18	Gear chamber cover
4	Hexagon flange bolt	19	Hexagon flange bolt
5	Hexagon flange bolt	20	Hexagon flange bolt
6	Hexagon flange bolt	21	O-ring
7	Oil dipstick	22	O-ring
8	O-ring	23	Magneto outer cover
9	Clutch release shaft composition	24	Magneto cover
10	Release rod seal	25	Top dead center stopper gasket
11	Spring pin	26	Hexagon flange plug screw
12	Torsion spring	27	Hexagon flange bolt
13	Clutch cable bracket	28	Magneto cover gasket
14	Sprocket cover	29	Locating pin
15	Locating pin		

12.5 Gearshift Mechanism

Disassembly

Remove the brake arm.
Remove the shifting positioning plate.
Remove the gearshift combination.
The removed parts refer to the gear shift assembly.
Disassembly drawing

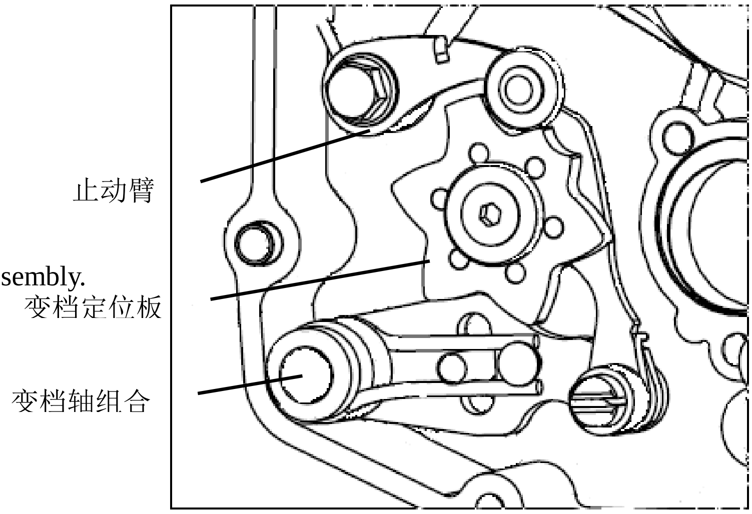

Inspection

Before dismounting, the gearshift baffle should be flexible, without clamping.
Check the wearing of the baffle and the gearshift mechanism. Replace it if it is seriously worn.
Check the wearing of the locating plate of the gearshift. Replace it if it is seriously worn.
Check whether the gearshift shaft is bent. Replace it if it is excessively bent.
Check the elasticity of the restoring spring. Replace it if necessary.

Unscrew the bolt and washer on the right crank shaft with electric or compression tools. Remove driving gear of clutch.

Remove the auxiliary shaft nut, sprocket and sleeve.

Unscrew the bolt in the veneer case.

Separate the crankcase.

Note: do not damage the surface of the case.

Remove the left part of the case.

13.6 Crankshaft Connecting Rod Assembly

Removal

Remove the balance shaft assembly and crankshaft connecting rod assembly from the right crank case.

Note: do not damage the surface of the case.

Inspection

Measure the stroke on the left and right side of the big end of the collecting rod.

Allowable limit: 0.5mm

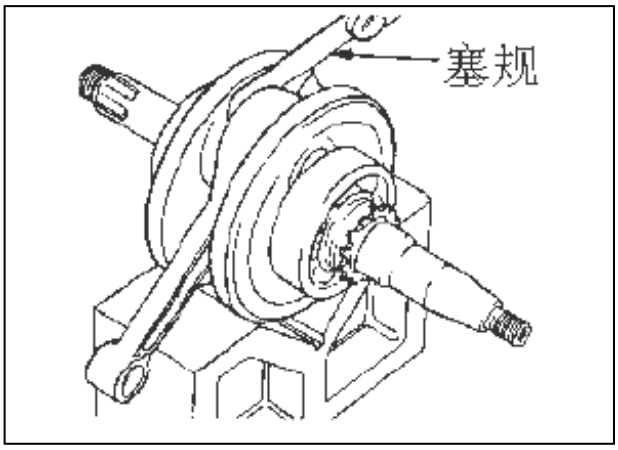

Measure the stroke along X-Y direction of the big end
Allowable limit: 0.002-0.010mm

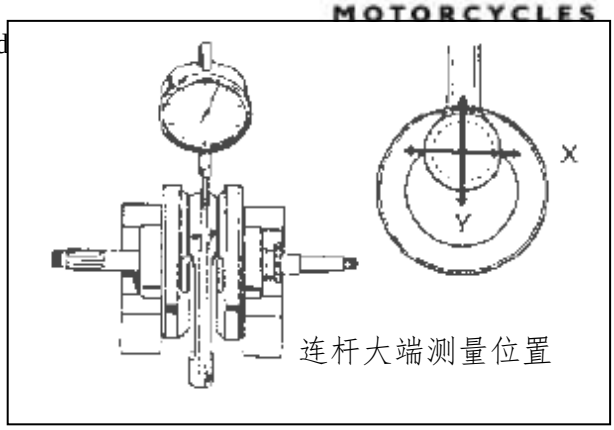

Measure the dislocation of the crank shaft.
Allowable limit: 0.03mm

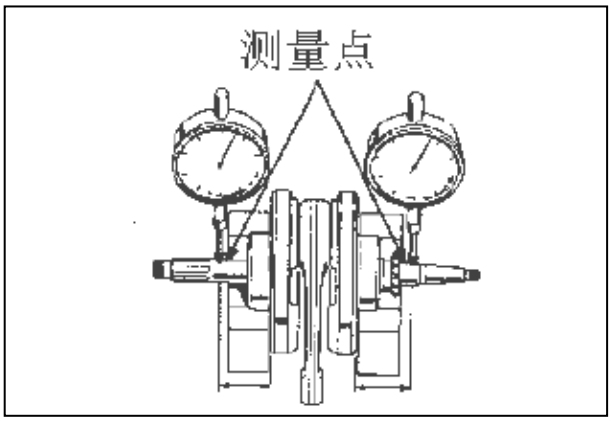

Check if the crank shaft is noisy or loose while restori
Replace it if so.

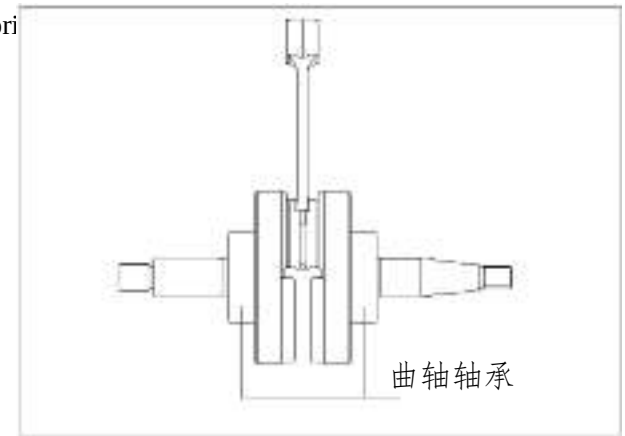

Draw out the shifting fork.
Remove the gearshift drum.
Remove the gearshift fork.

Inspection

Measure the shifting fork hole OD.
Allowable limit: 11.95mm

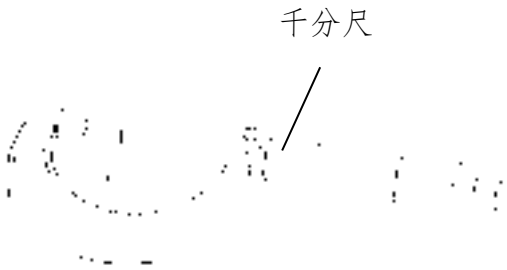

Measure the shifting fork hole ID.
Allowable limit: 12.05mm

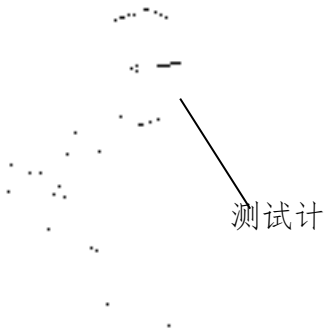

Measure the the shifting fork thickness.
Allowable limit: 4.7mm

Measure the gearshift drum OD.
Allowable limit: 35.75mm
Measure gearshift drum lock groove width
Allowable limit: 7.35mm

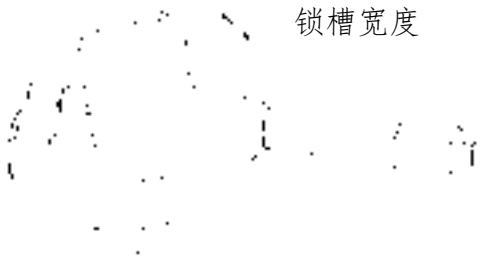

13.7 Transmission chamber

Remove the primary shaft assembly.
Remove the secondary shaft assembly.

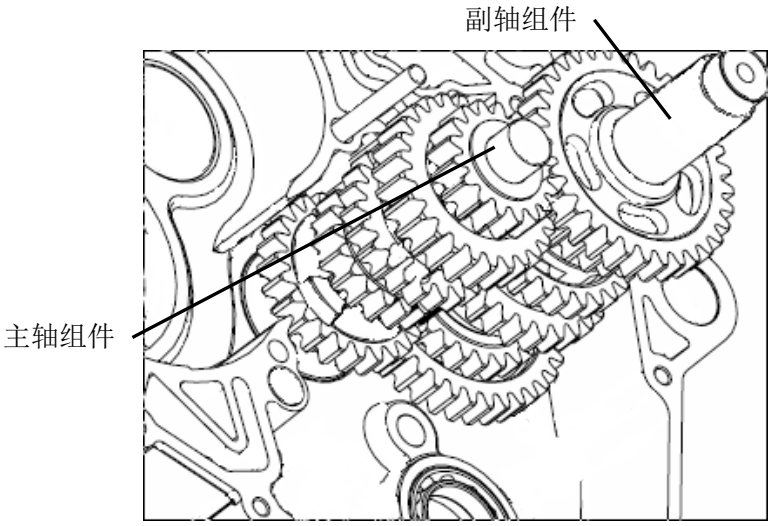

Transmission Component Disassembly

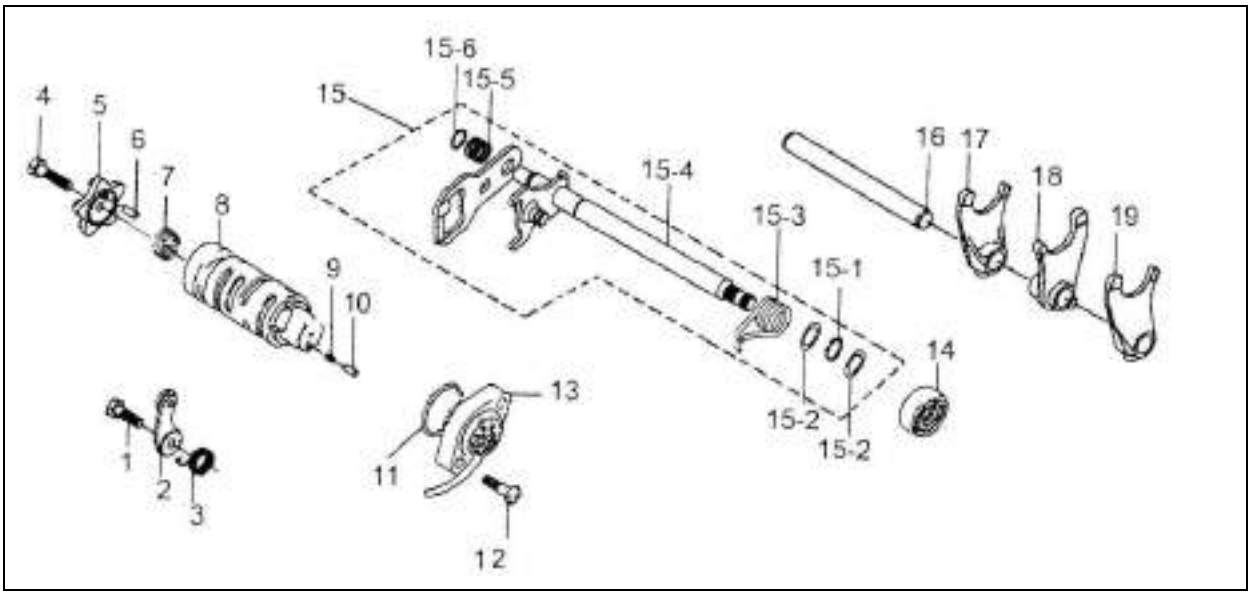

S/N	Name	S/N	Name
1	Hexagon bolt	14	Gearshift shaft seal
2	Gear shifting cam positioner composition	15	Gearshift shaft assembly
3	Gear shifting cam positioning spring	15-1	Circlip
4	Cross recessed hexagon screw	15-2	Hard steel shim
5	Gear shifting cam positioning plate	15-3	Gearshift shaft return spring
6	Locating pin	15-4	Gearshift shaft composition
7	Needle bearing	15-5	Compression spring
8	Gear shifting cam	15-6	Circlip
9	Compression spring	16	Gearshift fork shaft
10	Cam gear positioning pin	17	Right gearshift fork
11	O-ring	18	Intermediate gearshift fork
12	Cross recessed pan head screw	19	Left gearshift fork
13	Gear switch seat assembly		

Inspection

Inspect the abrasion at the surface and transmission claw of the gear.
Replace it in case of severe abrasion or damage.

Remove the bearing and oil seals of left and right crankcase.
Inspect the damage to bearings and oil seals, replace them if any.

Attentions:
Abandon the outgoing bearings and replace with new products.
Disassemble the bearings and oil seals with special tools.

Primary/ Secondary Shaft Assembly

Attentions
Coat the gears and shafts with lubricating oil when assembling. Protect the gears against jamming upon assembly.

Notes:
The crankcase is assembled in reverse procedures of removal.

Exhaust System Inspection and Maintenance

Muffler

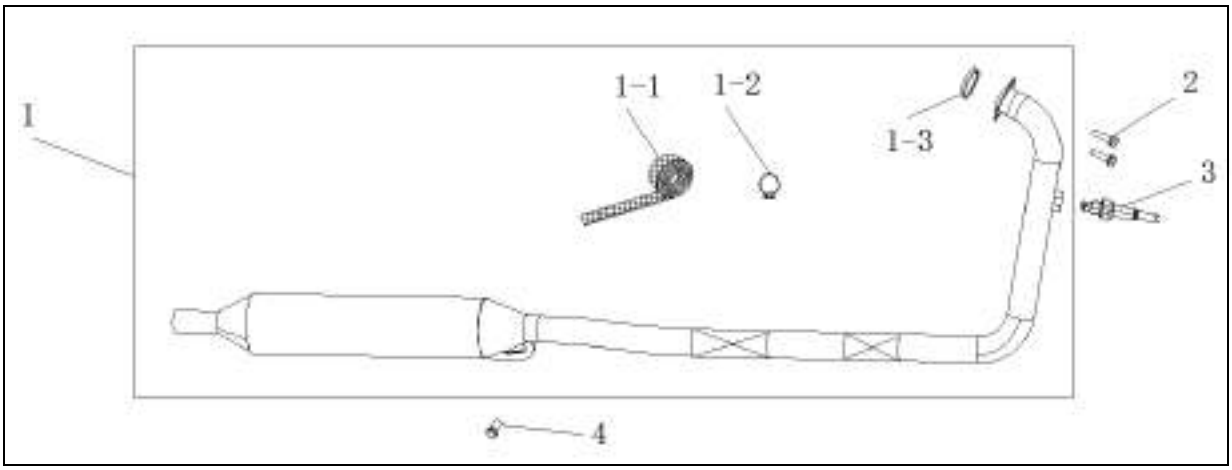

S/N	Name	S/N	Name
F05-1	Muffler assembly	F05-2	Bolt M8×25
F05-1-1	Anti-scald strip	F05-3	Oxygen sensor
F05-1-2	Muffler hoop	F05-4	Bolt M10×1.5×25
F05-1-3	Exhaust pipe gasket		

XIII Exhaust control system

13.1 Exhaust control system Guarantee

1. This exhaust control system is in accordance with the requirements of 134/2014/EU. Our guarantee is set for products in effective service life that are maintained absolutely following our instruction.

2. Scope of guarantee

1〉 Guarantee on the function of the exhaust control system

During the service life (15,000 km), it can pass all the periodic and non-periodic emissions control inspection of the government authorities.

3. The following cases are out of the scope of the guarantee. If maintenance services are needed, services from the franchisers or service centers of our company in different places will be available for the customers at a reasonable price.

1〉 Maintenance is not conducted according to the intervals or distance of drive specified in our instructions.

2〉 Periodic maintenance, adjustments or repair work is not done in our franchisers or service centers, or no evidence of maintenance is available.

3〉 Overload or improper use.

4〉 The vehicle is modified, the original components are removed or replaced with other components privately.

5〉 The vehicle is used in racing or frequently operated in roads that are used for non-motor vehicles.

6〉 The vehicle is damaged by such climate disasters as typhoons and floods, or in improper use, car accidents and clashes;

7〉 Not in use for a long time and lack of periodic maintenance.

8〉 The odometer is damaged but not repaired immediately, or it is modified, stopped or replaced.

9〉 Please send the vehicle to the inspection place every three months to check emission control. Through noise test, the new vehicles produced in our company comply with the requirements of 134/2014/EU.

13.2 Periodical Maintenance Instructions

To prevent deterioration of environmental pollution, the government requires all the manufacturers to ensure their products meet the emissions control standards. Our products meet those standards. We are also making our due contribution to air purification and reducing air pollution.

This vehicle has passed strict inspection. It completely meets the emissions control standards. Due to the varying concrete conditions of use of the vehicles, we made the following inspection table for periodic emissions inspection. To ensure normal levels of emissions, the user should follow the specified intervals of maintenance, adjustment or repair.

Please consult the dealers or the customer service centers of KSR if you have other problems.

Relevant emission standards are as follows:

Emission regulation	CO	HC	NO_X
Emission standard	≤1140mg/km	≤ 380mg/km	≤ 70mg/km

※effective emission standards are subject to the newest updated changes made by the government.

If periodic maintenance is not done in our franchisers or service centers, we will not be responsible for possible case of being canceled. Please do necessary checks at all times to ensure optimal functions of the vehicle.

Note: ① the air filters on vehicles running on gravel pavements or severely polluted environment need to be cleaned more frequently, so as to lengthen their service life.

② better maintenance should be given to vehicles that are constantly used or frequently running at high

speeds.

Please notice the following items to ensure consistence with emission standards:

1〉Fuel: only E5 or above unleaded gas can be used.
2〉Engine oil: only specified engine oil can be used.
3〉Maintain it according to the instruction in the periodic maintenance table.
4> No private adjustment or replacement can be done to the exhaust control system, including: use of spark plug, idling adjustment, ignition timing and adjustment to the throttle.
5〉Notes:
Problems in ignition system, charging system and fuel system have great impacts on the catalytic device, so if there are problems in the engine, please send it to the franchisers or service centers for check, adjustment or repair without delay.
6〉The exhaust control system of this vehicle complies with the national regulation, so only the components produced in our company can be used while replacing any components in the system, and it should be done in our franchisers or service centers.

13.3 Mechanical Functions of Exhaust Control System

Overview
The exhaust solution is based on the use of the four-stroke single cylinder engine and the throtle, air inhaling device, high standards of emission control and use of charcoal canister for emission evaporation.

※ **Improvements in the engine**
Central spark plug are improved by improving the compression ratio, ignition time and exhaust system in the engine to improve the efficiency of fuel.

※ **Air inhaling device**
Air is led into the exhaust pipe to compose the CO and HC that are not completely burned into harmless emission.

Division	Device	Component	Purposes and functions
Combustion system	Combustion chamber	Hemispherical combustion chamber	The hemispherical combustion chamber with a centrally-placed spark plug ensures the combustion safety.
Exhaust system	Catalytic device	Catalytic converter	Canned oxidation catalyst contained in the center of the exhaust pipe oxidizes CO, HC and NO_X.

—Adjustable parameters and recommended setpoint
Idle speed adjustment - engine speed 1500 ± 100rpm / min
CO concentration of 0.5-1.2%

13.4 Catalytic Conversion System

13.4.1 Structure:

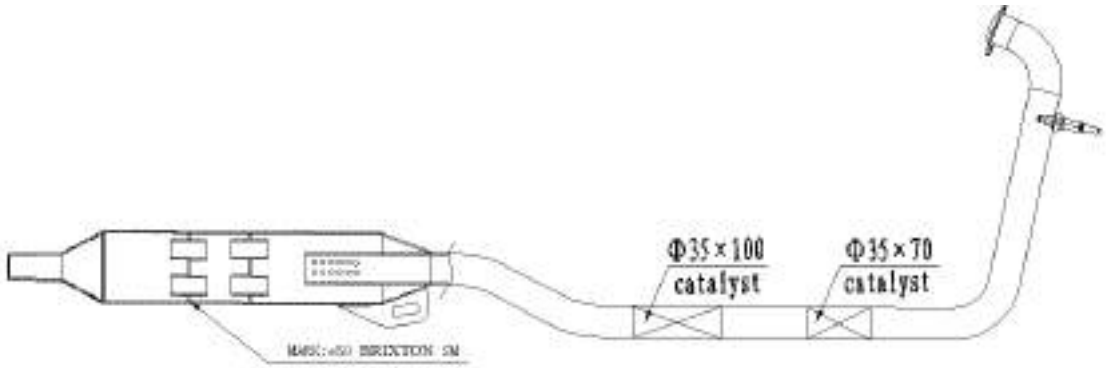

13.4.2 Instructions:

1. The function of the converting catalytic is to convert the complete waste gas like HC, CO and NO_X after combustion to harmless gas like H_2O, CO_2 and N_2, etc. and then discharge them.

2. The converting catalytic contains rare metals like platinum and rhodium, unleaded gasoline is permitted only.

※ Please be noticed that leaded gasoline will disable the catalytic.

- **General considerations of maintaining vehicles (exhaust pipes) equipped with catalytic converters:**

1〉Keep off the engine of the vehicles equipped with catalytic converters during the startup or after flameout due to the high temperature in short time.

2〉Vehicles equipped with catalytic converters shall be kept away from the combustibles.

3〉Do not start the engine in the airtight space as CO (which is insalubrious) remains in the exhaust pipe.

4〉Vehicles equipped with catalytic converters shall not use leaded gasoline. (in case of catalytic poisoning)

5〉Do not start the engine by pulling the vehicle. If necessary, please wait till the engine and catalytic converter cool down.

6〉Shutting down or gearing up while driving downhill is prohibited.

7〉Do not drive vehicles with poor ignition condition.

8〉Do not remove the ignition plug or start the engine to inspect the spark while repairing the ignition system. If necessary, do not take too long.

13.5 **Solutions to the Problem of Idle Exhaust Exceeding Specified Value**

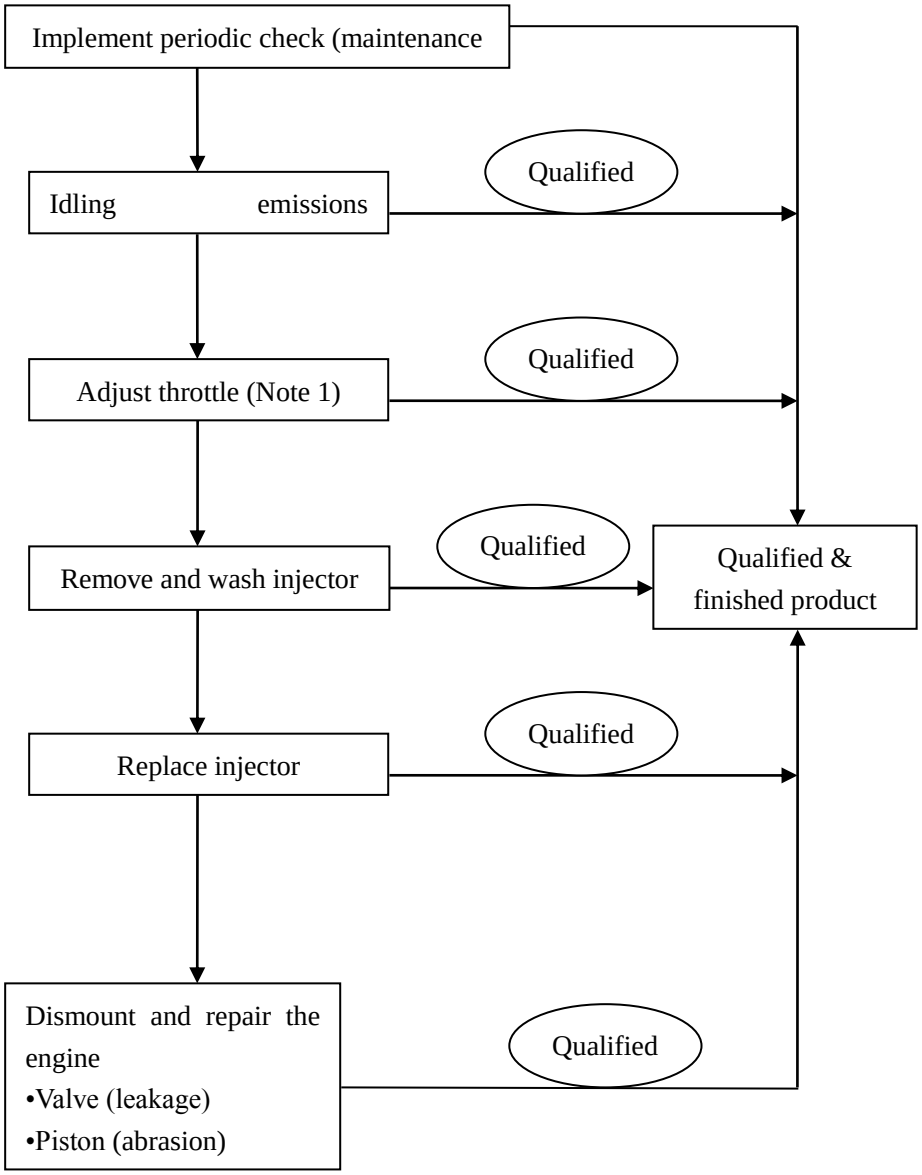
Implement periodic check (maintenance
Idling emissions
Qualified
Adjust throttle (Note 1)
Qualified
Remove and wash injector
Qualified
Qualified &
finished product
Replace injector
Qualified
Dismount and repair the engine
•Valve (leakage)
•Piston (abrasion)
Qualified

Notes:

1: Test it according to the idling testing procedure.

2. Adjust the engine idle speed to the specific value, and test CO/HC in idling.

Inspection and Maintenance of Electronic Fuel Injection System

Electrical Schematic Diagram

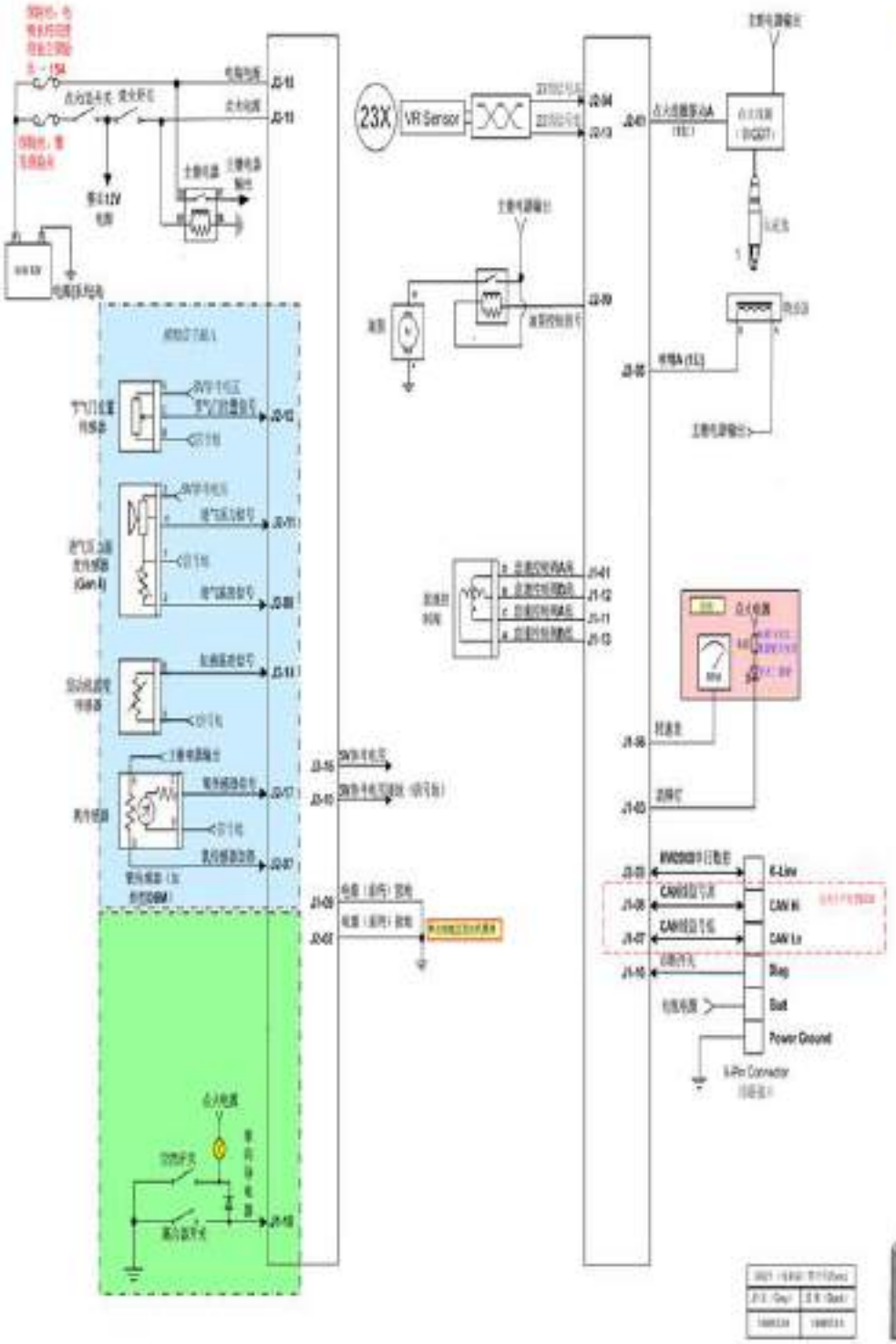

接线号	功能描述
J1-1	怠速控制阀A高
J1-2	
J1-3	故障灯
J1-4	
J1-5	
J1-6	车速表
J1-7	CAN通信信号低
J1-8	CAN通信信号高
J1-9	电源（系统）地线
J1-10	
J1-11	怠速控制阀A低
J1-12	怠速控制阀B高
J1-13	怠速控制阀B低
J1-14	
J1-15	
J1-16	诊断开关
J1-17	
J1-18	空挡开关
J2-1	点火线圈初级A（1缸）
J2-2	电源（系统）地线
J2-3	K/CAN
J2-4	ZS信号高
J2-5	蓄电池
J2-6	
J2-7	氧传感器加热
J2-8	进气温度信号
J2-9	油泵控制信号
J2-10	5V参考电压负极（信号地）
J2-11	进气压力信号
J2-12	节气门位置信号
J2-13	ZS信号低
J2-14	氧温度信号
J2-15	点火电源
J2-16	5V参考电压
J2-17	氧传感器信号
J2-18	电池电源

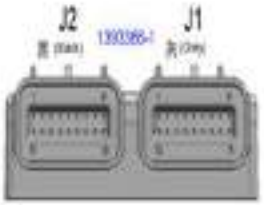

XIV. Electronic Fuel Injection System

14.1 Introduction to Electronic Fuel Injection System

BX125 adopts small engine EFI system pr26Voduced by Delphi Company, and the system can realize closed-loop control through oxygen sensor. The system is featured by independent fuel injection and ignition control. Three-way catalytic converter is used to deal with the gas after combustion in the cylinder to make it converted into harmless gas into the atmosphere. The system is a closed-loop control and self-learning system, effectively eliminating the manufacturing differences of the system and relevant mechanical parts and components, enhancing the overall consistency of the whole vehicle, and eliminating the error caused by wear and other reasons after the vehicle is operated.

14.2 Parts of Electronic Fuel Injection System

14.2.1 Engine controller (ECU MT05)

14.2.1.1 ECU working principles

Engine controller inspects engine running conditions at real time with the assistance of various sensors, optimizes the driving performance under different working conditions through rational calculation and self-learning control output device, and ensure the emission and fuel economical efficiency of the original vehicle. When the system is in trouble, the engine controller can also wake up the self diagnosis.

14.2.1.2 ECU appearance

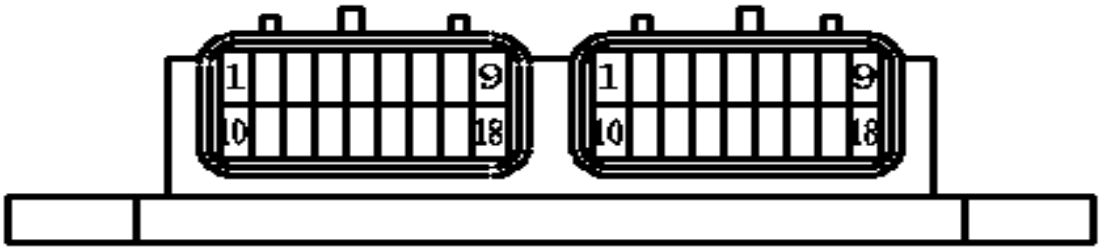

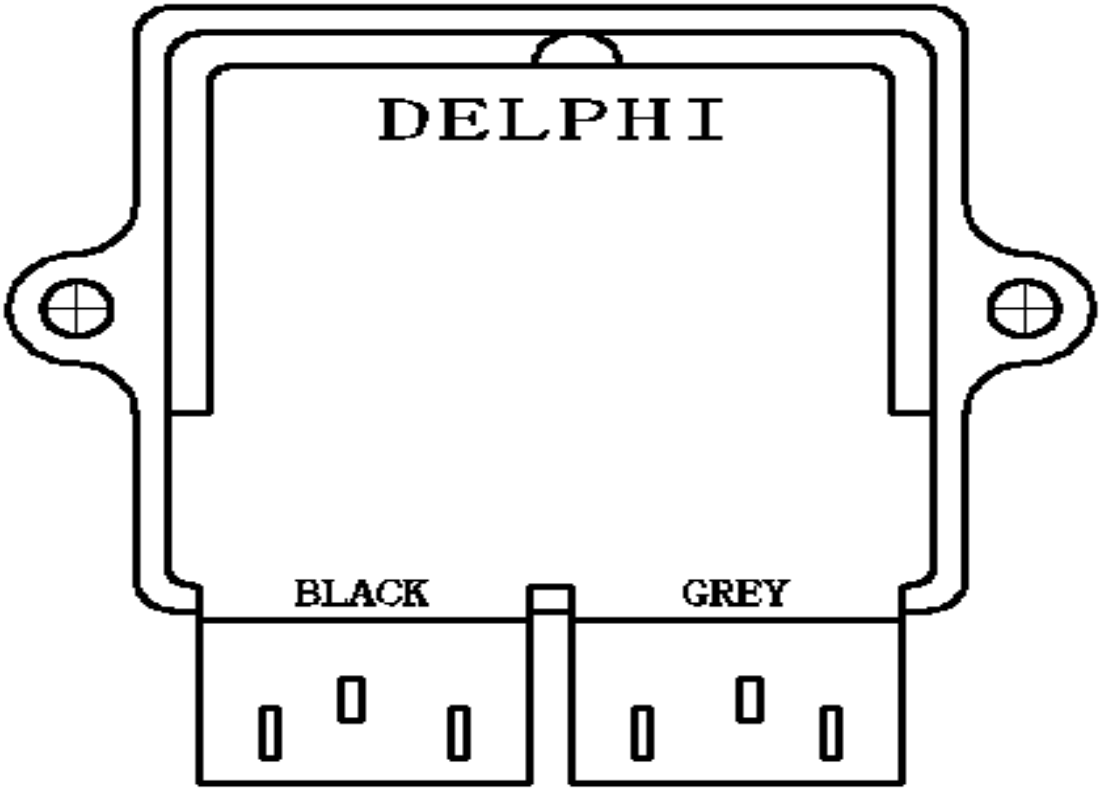

14.2.1.3 Definition of ECU pin

J1- Function correspondence table: (GREY)

S/N	Code	Description		S/N	Code	Description
1	J1-1	Idle speed stepper motor A (high)		10	J1-10	
2	J1-2			11	J1 -11	Idle speed stepper motor A (low)

3	J1-3	Fault indicator (send alarm to the meter)		12	J1 -12	Idle speed stepper motor B (high)
4	J1-4			13	J1 -13	Idle speed stepper motor B (low)
5	J1-5			14	J1 -14	
6	J1-6	Tachometer (send speed to the meter)		15	J1 -15	
7	J1-7	CAN wire cable (low)		16	J1 -16	Shutdown (diagnostic switch)
8	J1-8	CAN wire cable (high)		17	J1 -17	
9	J1-9	Power supply (system) ground		18	J1 -18	Neutral position / clutch signal input

J1-: (BLACK)

S/N	Code	Description	Remarks	S/N	Code	Description
1	J2-1			10	J2-10	5V voltage reference ground (signal ground)
2	*12-2*	Power supply (system) ground		11	J2-11	Intake air pressure signal
3	J2-3	KW2000		12	J2-12	Throttle valve position signal
4	J2-4	23-teeth signal (high)		13	J2-13	23-teeth signal (low)
5	J2-5	Nozzle A		14	J2-14	Cylinder head temperature signal
6	J2-6			15	J2-15	Power supply for ignition
7	J2-7	Heating of 1# cylinder oxygen sensor		16	J2-16	5V reference voltage
8	J2-8	Intake air temperature signal		17	J2-17	Signal of 1# cylinder sensor
9	J2-9	Fuel pump control signal		18	J2-18	Power supply of accumulator

14.2.1.4 Circuit diagram of electronic fuel injection

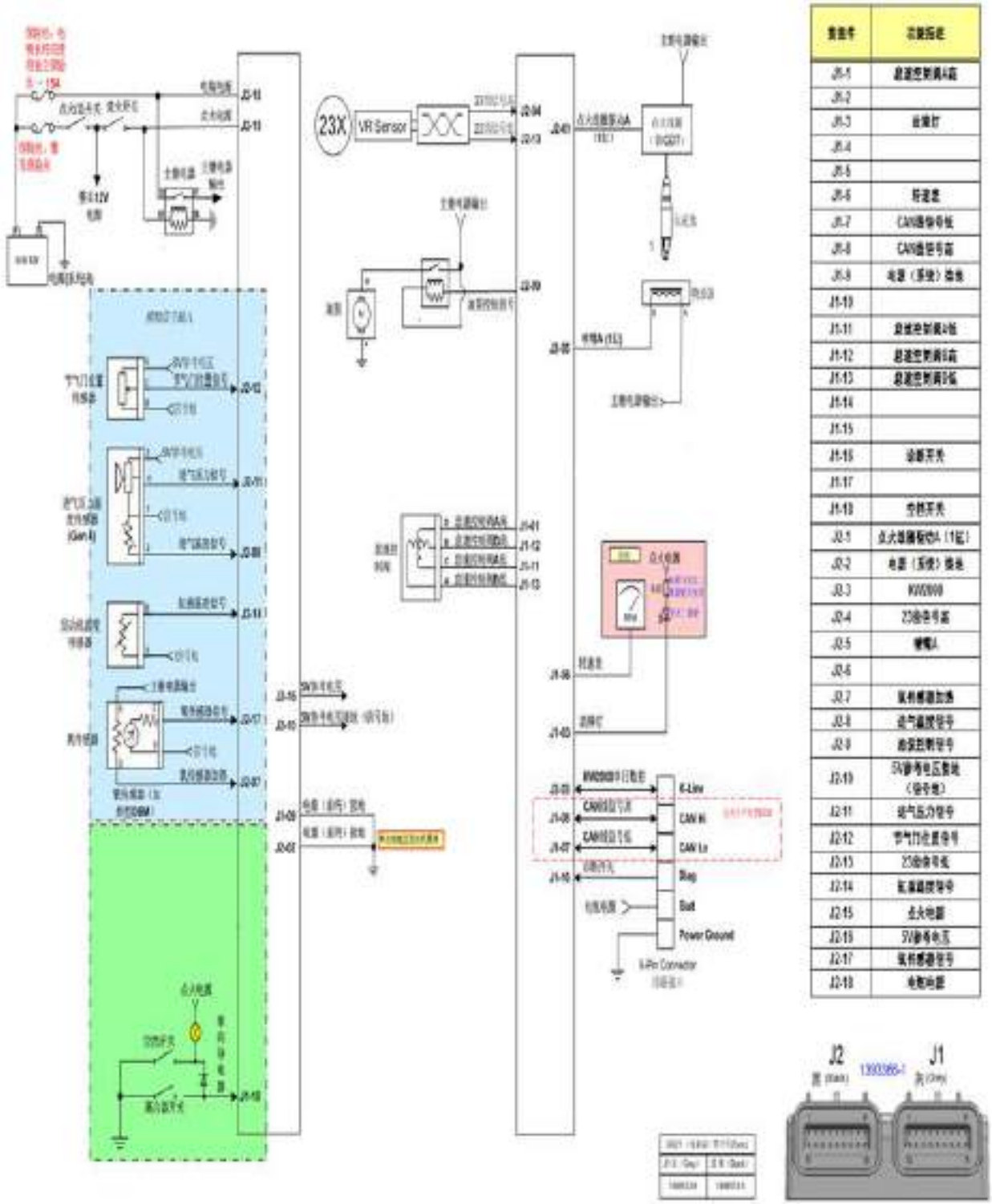

14.2.1.5 Precautions for ECU operation

1. Do not put the ECU in a high-temperature part, e.g, muffler or engine;
2. Do not put the ECU near water droplets, oil or any liquid;
3. Do not cover ECU with mud or other contaminants, thereby not affecting its heat dissipation performance;
4. Use M8 bolt for connection and keep the tightening torque at about 3.9Nm, ensure smooth installation surface to prevent against circuit board bending caused by external force on the ECU.
5. The voltage of DC power supply is 9 to 16V when the ECU is under normal operation. If DC voltage is not more than 26V and the ECU operates only 1 min, no permanent damage will be caused. If the reverse voltage is not more than 13V DC voltage and the ECU works less than 1 min, no permanent damage will be caused.

14.2.2 Fuel injector

14.2.2.1 Working principles of fuel injector

Fuel injector is designed as having electromagnetic coil inside to surrounding the iron core. Two electrodes of the coil are taken s the input control ports of thee injector. When the coil is powered, the electromagnetic force can overcome the spring force of the ball valve and the pressure of fuel to make the ball valve raise, and then the high-pressure fuel (250Kpa) in fuel pipe can flow through the valve seat hole to orifice plate, further forming conical mist to inject to the intake valve. When the injector is powered off, the electromagnetic force disappears, the ball valve is self-closed under the action of return spring to stop the injection.

14.2.2.2 Fuel injector appearance

14.2.2.3Precautions for fuel injector operation

1. Fuel injector interior is provided with a filter that is an non-repairable part. The filter is designed to filter out the accumulated impurities between fuel filter and fuel injector. The impurities may result in bonding, flow excursion, leakage and other faults to the injector. Therefore the fuel filter is very important.
2. It can be replaced only when the fuel injector has the same parts.

14.2.3 Throttle valve

14.2.3.1 Working principles of throttle valve

Throttle valve is mainly composed of main cast body, return spring, accelerator cable, throttle valve position sensor and idle speed control screw. Throttle valve position sensor sends the accelerator opening to the ECU, idle speed control screw can control idle rotational speed and its stability, specifically reducing the speed by decreasing the air volume of bypass channel in clockwise direction and increasing the speed by increasing the air volume of bypass channel in counterclockwise direction. The screw is generally screwed in about 2 turns.

Throttle Valve

14.2.3.2 Throttle valve appearance

14.2.3.3 Throttle valve cleaning method

Throttle valve is cleaned by throttle valve cleaning agent. Specifically, spray the agent to inner valve wall, gently brush off the dust, and prevent against dirty matters blocking the bypass channel.

14.2.4 Temperature sensor at cylinder end

14.2.4.1 Working principle of temperature sensor at cylinder end

Temperature sensor at cylinder end serves at air cooled engine, and it used to measure the temperature of engine cylinder end. Within the range of sensor temperature, the resistance will change along with engine temperature, and its character is the negative temperature coefficient resistance.
It is an non-repairable part.

Temperature sensor at cylinder end

14.2.4.1 Appearance of temperature sensor at cylinder end

14.2.5 Intake air temperature and pressure sensors

14.2.5.1 Working principles of intake air temperature and pressure sensors

Temperature sensor is used to measure the temperature of intake air, and its resistance will change with the air temperature, and its character is the negative temperature coefficient resistance. The sensor is an non-repairable part.

Temperature sensor is used to measure the temperature of intake air, and its resistance will change with the air temperature, and its character is the negative temperature coefficient resistance. The sensor is an non-repairable part.

14.2.5.2 Appearance of intake air temperature and pressure sensor

14.2.7 Oxygen sensor

14.2.7.1 Working principle of oxygen sensor

The sensor can detect the oxygen content in the exhaust gas from engine exhaust pipe, and is used for closed loop control of inner fuel of the ECU to make the combustion in engine at the most reasonable air-gasoline ratio (Article 14.7).

14.2.7.2 Appearance of oxygen sensor

14.2.8 Ignition coil

14.2.8.1 Working principles of ignition coil

The ignition coil can provide energy to the spark plug, and is connected to the spark plug through a high voltage wire.

14.2.8.2 Appearance of ignition coil：

14.2.9 Idle speed stepper motor

14.2.9.1 Working principles of idle speed stepper motor

Idle speed control valve is to control the flow area of the bypass airway of throttle valve to adjust the amount of air into the engine, thereby realizing idle speed control.

14.2.9.1 Appearance of idle speed stepper motor

14.2.10 Fuel pump

14.2.10.1 Working principles of fuel pump

Electric fuel pump provides 250Kp gasoline pressure along with pressure regulator to the engine, and is mounted at the bottom of gasoline tank.

14.2.10.2 Appearance of fuel pump

14.2.10.3 Fault diagnosis of fuel pump

1. After the key is turned on, fuel pump will run for about 3 seconds; if you can hear the sound of oil pump rotation, please directly read Step 4;
2. Disconnect the pump connector and inspect whether the power supply voltage of fuel pump is about 12V;
3. If there is problem is Step 2, connect the accumulator to provide 12V DC to the fuel pump, and inspect whether the pump operates;
4. If the pump can normally operate, use gasoline pressure gauge to check whether the fuel pipe pressure in the front of fuel injector is around 250Kpa at idle speed of the engine;
5. If fuel pipe pressure is less than 220KPa, inspect whether fuel pipe has leakage, fuel pump is in contra-rotation, and fuel filter is block.

14.2.10.4 Common faults of fuel pump

1. The plug of fuel pump assembly is reversely connected, leading to contra-rotation of fuel pump, failing to provide enough fuel pressure to the engine, and making the engine not work properly.
2. Fuel pump is damaged and cannot rotate.

14.2.10.5 Precautions for fuel pump operation

1. The fuel tank of new car has not gasoline, and fuel pipe has a a lot of air after gasoline feeding, so it is necessary to start up the engine for many times to discharge the air in fuel pipe, and then the engine can work normally. This is a normal phenomenon, and after then car startup will not take a long time.
2. Since the gasoline can cool down the fuel pump, the pump cannot be operated with little or no gasoline, otherwise, the pump will be burn out.

14.3 Fault diagnosis method

Fault indicator is on the dashboard and marked with FI. Under normal circumstances, after turning the key on, if the fault indicator blinks, the EFI system is powered on and can work; if the light is not lit, the EFI system is not powered on and will not work, and it is necessary to inspect the connection between the fuse and accumulator negative electrode. After the engine is started, the fault indicator goes out, indicating there is no fault; on the contrary, if the engine is started and the fault indicator is still on, the EFI system doesn't work properly and has faults which to be excluded.

There are 3 methods to detect faults.

14.3.1 The flicker of fault indicator (FI) is directly used for diagnosis.

After it is confirmed that there is fault, turn on and off the key for three times (i.e., turn on - turn off - turn on - turn off - turn on - turn off), and then the fault indicator will flash out a corresponding fault code. Find out the fault as per the *List of Fault Codes*.

The fault indicator is used to find out the fault, for example, if the fault is that intake air pressure sensor is in open circuit or signal port pin is short connected to the negative electrode of the accumulator, after three time of turning on and off the key, the first 10 times of fault indicator flashing represents for 0, 1 time of flashing after 1.2s represents for 1, 10 times of flashing after another 1.2s represents for 0, and 7 times of flashing after more 1.2s, and then the fault code is P0107. In this way, except 0 is represented by 10 times of flashing, the numbers 1 to 9 are represented by corresponding times. If there are other fault codes, such as P0201 (i.e., fuel

injector in front cylinder has faults), the indicator will continually flash out the fault code P0201 3.2 seconds after flashing out P0107. If no other fault codes, the indicator will circularly flash out P0107 and P0201, and find out the fault as per the List of Fault Codes.

If PCHUD software is adopted, it will report the fault code with decimal numbers, the decimal system in the *List of Fault Codes* is one-to-one correspondent to the hexadecimal system and the fault can be found out according to the corresponding relationship. If MULFCURR (current fault) = 263, it is correspond to P0107 in the *List of Fault Codes*, i.e., it is the fault of intake air pressure sensor.

14.3.2 Diagnosis tester is used to diagnose the faults.

Operation method:

1. Find the 6-hole diagnosis interface of the motorcycle;
2. Connect the connection wire to the diagnosis tester interface,
3. Turn on the key to diagnose;

14.3.3 PCHUD software is used to inspect the faults on the computer.

PCHUD is used to detect and record engine operating data. Before using the software, connect the computer and 6-hole diagnosis interface of the motorcycle through K line. Before use, it is necessary to install the driver software of K line on the computer.

Instructions to PCHUD software:

（1）Connect the computer and 6-hole diagnosis interface of the motorcycle through K line, and open the key.

（2）Click "HUD.EXE" to start PCHUD.

（3）On the software interface, click "File", "Open", "PCHUD.HAD" and "Ok" step by step.

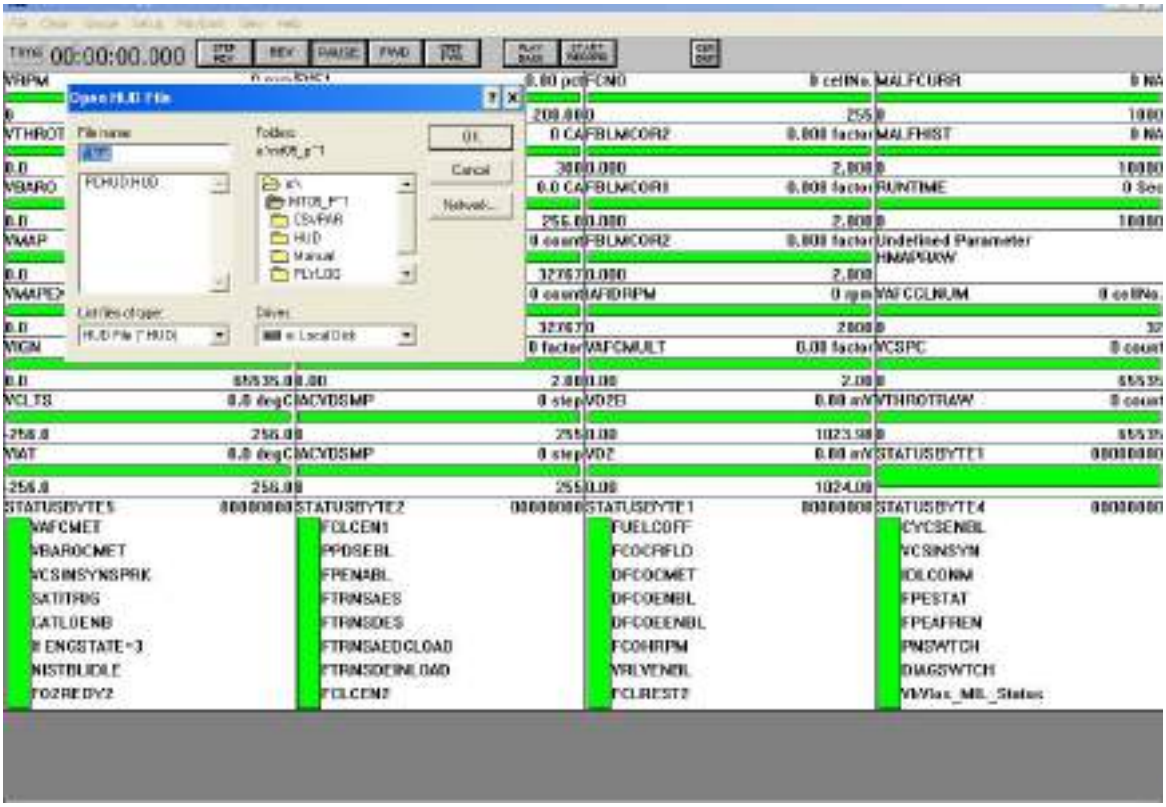

（4）Select "Parameter File" under "Setup", then click "MT05common.par", and then select "Comm protocol" under "Setup", select "Keyword2000" and click "Ok", and select 17 under Device Code at the same time.

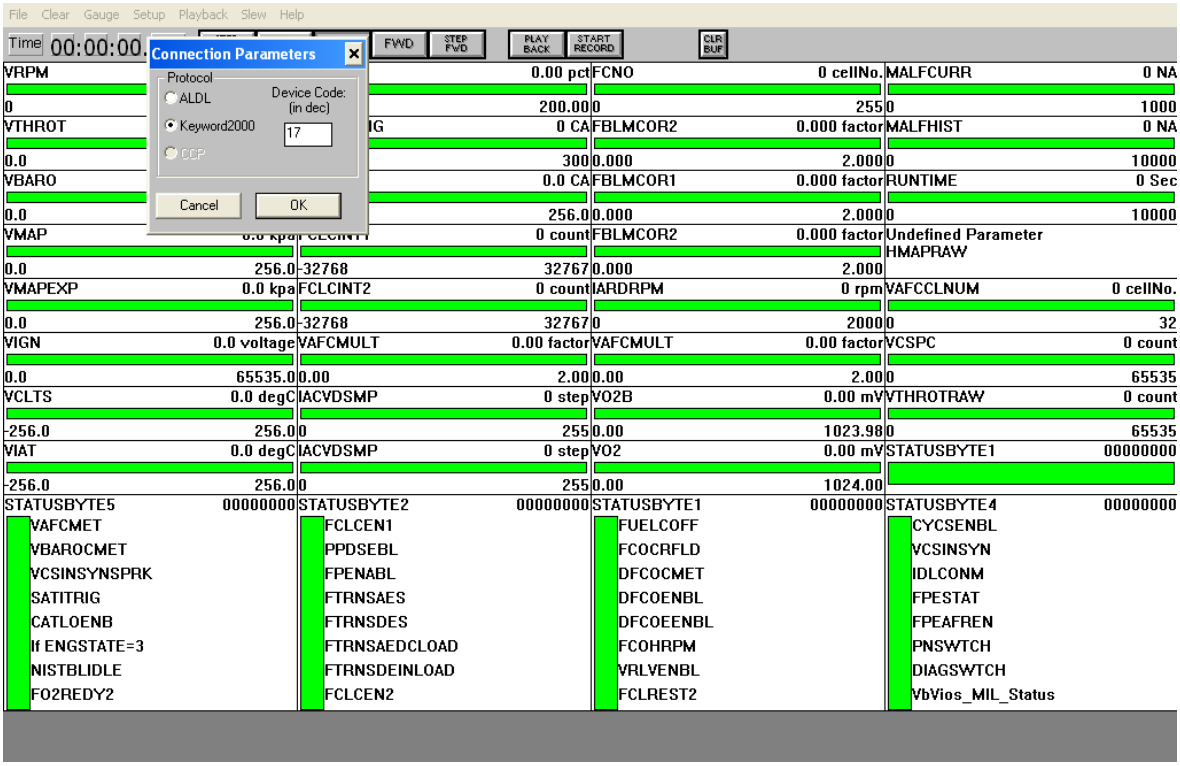

（5）If the software interface cannot display communication data after the computer is powered, it is necessary to conduct the following work: inspect whether COM port is correctly arranged in the state of "Setup" (generally set as COM Port: 4. Baud Rate: 10400; don't select "DTR high at startup"),

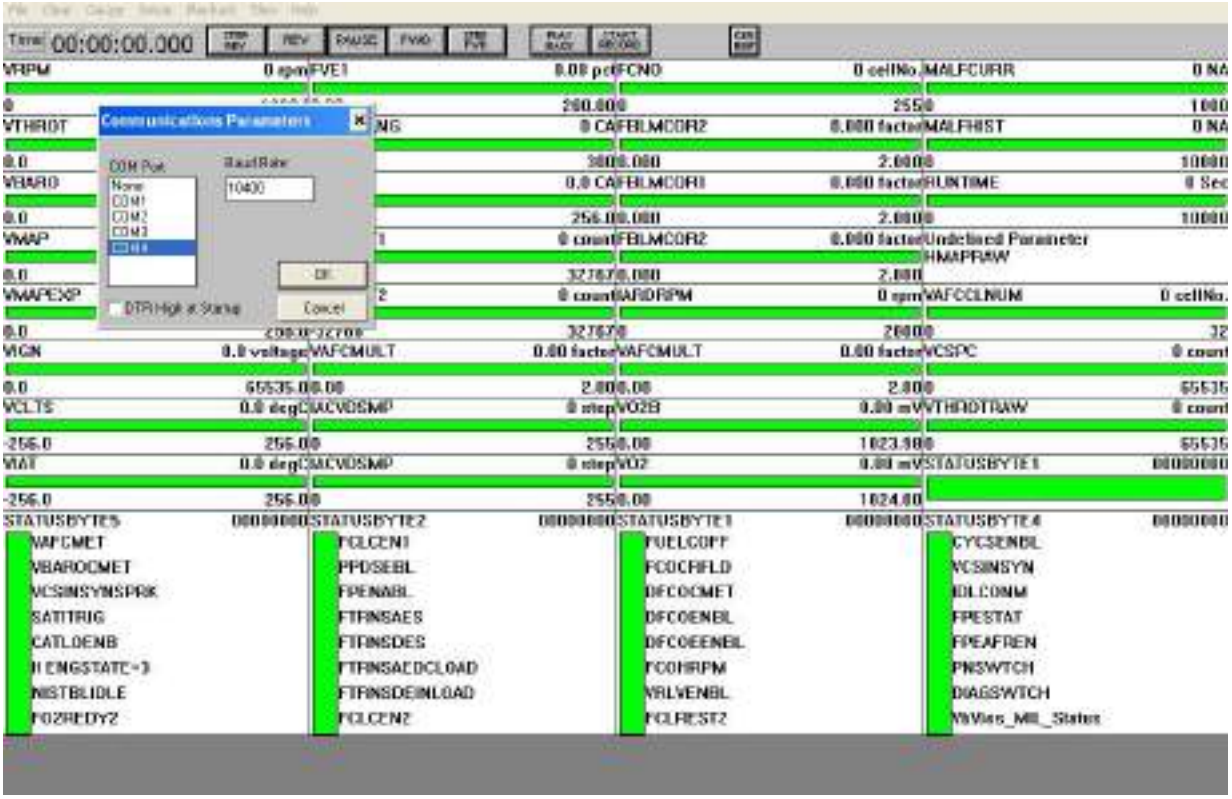

Then the software interface will recover communication, display current fault code at "MALFCURR" and past fault code at "MALFHIST", and inquire the corresponding faults as per the List of Fault Codes.

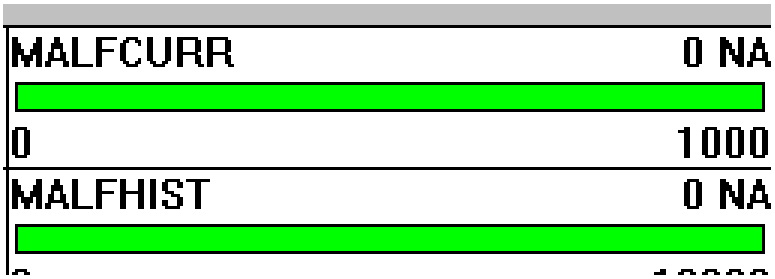

Schedule 1: Interpretation of PCHUD Software Parameters

VRPM	engine speed
VTHROT	throtle position
VBARO	BARO
VMAP	manifold air pressure
VMAPEXP	expect manifold air pressure
VIGN	ignition key voltage
VCLTS	cylinder temperature or coolant temperature
VIAT	intake air temperature
STATUSBYTE5	STATUSBYTE5
VAFCMET	airflow correction met
VBAROCMET	Baro update met
VCSINSYNSPRK	sequential spark enable
SATITRIG	tip-in Spark Advance retard trigger
CATLOENB	catlyst light-off logic enable
IF ENGSTATE=3	engine work in run state
NISTBLIDLE	stable warm idle
FO2REDY2	O2 ready
FCNO	block learn memory cell
FBLMCOR1	cylinder 1 block learn memory
FCLCINT1	intergral of close loop correction
FCLCMUL1	close loop correction
IARDRPM	desired idle rpm
IARPMERR	idle rpm error
FPWVC1	base pulse width of cylinder 1
VO2	Oxygen sensor signal
STATUSBYTE3	STATUSBYTE3
FO2STAT1	cylinder 1 oxygen sensor signal rich lean state
FCLREST1	cylinder 1 close loop correction reset
FOSHTREN	Oxygen sensor heater enable
FO2REDY1	cylinder 1 Oxygen sensor ready
IF IACV MODE=0	idle airflow control valve close loop correction enable
IAMTRLOST	IACV lost
IACMVIHB	IACV move disable
VIGNS	ignition state
FVE1	cylinder 1 Volumetric efficiency
VMAPRANG	MAP read angle
AFFNLAFR	target air fuel ratio
SAESTA	cylinder 1 Spark Advance
SAIDLDYN	idle dynamic Spark Advance
SPDWELL	dwell time

IAINTEGOFST	airflow integral of idle air control valve
IACVDSMP	desired position of idld air control valve
STATUSBYTE2	STATUSBYTE2
FCLCEN1	cylinder 1 close loop correction enable
PPDSEBL	prime pulse disable
FPENABL	fuel pump enable
FTRNSAES	acceleration enrich enter
FTRNSDES	deceleration enlean enter
FTRNSAEDCLOAD	acceleration enrich exit
FTRNSDEINLOAD	deceleration enlean exit
FCLCEN2	cylinder 2 close loop correction enable

附表 2：故障码对应表。

Schedule 2: List of Fault Codes

List of MT05 Fault Codes		
Fault code	Description	Corresponding decimal number
P0107	Intake air pressure sensor is in open circuit or signal port pin is short connected to the negative electrode of the accumulator.	263
P0108	The signal port pin of intake air pressure sensor is short connected to the passive electrode of the accumulator.	264
P0112	The signal port pin of intake air temperature sensor is short connected to the negative electrode of the accumulator.	274
P0113	Intake air temperature sensor is in open circuit or signal port pin is short connected to the passive electrode of the accumulator.	275
P0117	The signal port pin of intake air temperature sensor at cylinder end is short connected to the negative electrode of the accumulator.	279
P0118	Intake air temperature sensor at cylinder end is in open circuit or signal port pin is short connected to the passive electrode of the accumulator.	280
P0122	Throttle valve position sensor is in open circuit or signal port pin is short connected to the negative electrode of the accumulator.	290
P0123	The signal port pin of throttle valve position sensor is short connected to the passive electrode of the accumulator.	291
P0131	The oxygen sensor in front cylinder is short connected to the negative electrode of the accumulator.	305
P0132	The signal port pin of oxygen sensor in front cylinder is short connected to the passive electrode of the accumulator.	306
P0031	The heating port pin of oxygen sensor in front cylinder is short connected to the negative electrode of the accumulator.	50
P0032	The heating port pin of oxygen sensor in front cylinder is short connected to the passive electrode of the accumulator.	49
P0201	Fuel injector in front cylinder has faults.	513
P0202	Fuel injector in rear cylinder has faults (e.g., the injector plug is not plugged in).	514
P0230	Fuel pump is in open circuit or short connected to the negative electrode of the accumulator.	560
P0232	Fuel pump is short connected to the negative electrode of the accumulator.	562

P0336	Crankshaft position sensor is interfered.	822
P0337	Crankshaft position sensor has no signal.	823
P0351	Ignition coil of front cylinder has faults.	849
P0352	Ignition coil of rear cylinder has faults.	850
P0562	Electronic fuel injection system is at lower voltage.	1378
P0563	Electronic fuel injection system is at higher voltage.	1379
P0560	Fault indicator is in failure (the filament is broken or the plug is not inserted).	1616
P1693	The tachometer is short connected to the negative electrode of the accumulator.	5779
P1694	The tachometer is short connected to the passive electrode of the accumulator.	5780
P0137	The oxygen sensor in rear cylinder is short connected to the negative electrode of the accumulator.	311
P0138	The signal port pin of oxygen sensor in rear cylinder is short connected to the passive electrode of the accumulator.	312
P0038	The heating port pin of oxygen sensor in rear cylinder is short connected to the passive electrode of the accumulator.	56
P0037	The heating port pin of oxygen sensor in rear cylinder is short connected to the negative electrode of the accumulator.	55

14.4 Common Trouble Shooting Methods

14.4.1 Maintenance tools

Diagnosis tester

a) Assembly and disassembly of parts and components of electronic control system - common disassembly tools of automotive parts and components;

b) Circuit and electric signal of electronic control system - digital versatile meter (with buzzer);

c) Fault diagnosis of electronic control system and detection of engine working condition;

  - ■ Fault diagnosis tester of electronic control system (recommended);
  - ■ Fault diagnosis software (PCHUD) and interface connection (used if possible);

d) List of Fault Codes of Electronic Control System (used in case of emergency);

e) Fuel pressure gauge, range: 0 ~ 300kPa.

14.4.2 Diagnosis tester used to display the working data flow of engine

Diagnosis tester is used to display thee working data flow of engine, further to analyze and judge the faults of the engine.

14.4.2.1 Step 1

a) Engine cable harness and vacuum line may affect the system to control air flow and fuel supply;

b) Whether oxygen sensor is installed in place may affect the system to judge the air fuel ratio;

c) Engine fault indicator may affect the system to alarm the faults;

d) Accumulator voltage can be used to determine whether the accumulator has sufficient electric power;

e) he experience can be used to judge whether coolant liquid temperature sensor, intake air temperature sensor, intake manifold absolute pressure sensor and oxygen sensor can normally display the value;

f) Work scope of throttle valve position sensor - Whether it can fully opened or closed may affect engine dynamic performance and some system functions.

14.4.2.2 Step 2

Whether ECU power supply if off - The communication between the diagnosis tester and the system is interrupted after lock switch is turned off.

14.4.2.3 Step 3

a) The temperature and temperature cycle of coolant liquid can indicate whether the thermostat is working properly；

b) Accumulator voltage can indicate whether the generator is in normal operation；

If higher, the generator regulator may break down；

If lower, the generator may improperly connected or break down;

c) Intake manifold pressure can indicate whether there is air leakage or valve clearance;

If valve clearance is too small, the pressure is high and may affect the dynamic performance of the engine, and due to earlier opening of exhaust valve, exhaust temperature increases, greatly shortening the service of oxygen sensor and three-way catalytic converter;

If valve clearance is too large, the pressure is low and may affect the system to judge the working status of the engine, thereby causing idle speed exception f hot car;

In addition, the pressure will be increased if the exhaust system is blocked, e.g., exhaust port has foreign matter and three-way catalytic converter is blocked due to high fuel consumption, and further the exhaust port is blocked due to broken catalytic converter;

d) As for the number of oxygen sensor cycles, less cycle indicates the failure of oxygen sensor.

14.4.3 Simple troubleshooting methods

EFI system shall be repaired in the following sequence. If it is necessary to repair fault in some step, the subsequent steps may be suspended, and the diagnosis tester is used for inspection, acceptance and the removal of fault codes as per article 14.3.

In the operation of diagnosis tester, the accumulator voltage shall not be less than 8.5 volts.

16.4.3.1 Daily use and maintenance

- 92# or 95# high-quality unleaded gasoline can be adopted.
- ECU is moisture-proof, but its shell may not be washed by water cannon.
- Gasoline filter is replaced every 7,000 ~ 10,000km.
- Under normal service conditions, throttle valve is cleaned every 10,000kg or 1 year.

16.4.3.2 Symptom - Startup failure

a) Switch the ignition switch to "ON" gear, and check whether engine fault indicator blinks.

If not flash:	◆ Inspect the fuse and ground wire, ◆ Check whether ECU patch plug is firmly connected, ◆ Use the actuator of the diagnosis tester to check whether the light and the line are normal, ◆ Check and repair the light bulb and the line, ◆ Use another ECU to judge.
If flash:	◆ Connect the diagnosis tester to the diagnosis port of the system.

b) Check whether the diagnosis tester can communicate with the system.

If not:	◆ Inspect the fuse and ground wire, ◆ Check whether ECU patch plug is firmly connected, ◆ Test whether the diagnosis tester can work properly on another normal car; ◆ Use another ECU to judge.
If yes:	◆ Eliminate faults as indicated by the diagnosis tester,

c) Check the fault of ignition system - whether spark plug is normal.

If not:	◆ Inspect whether high voltage wire and spark plug are firmly plugged or damaged, ◆ Use the other ignition coil assembly to judge, ◆ Use another ECU to judge.
If yes:	◆ Check whether high voltage wire is properly connected to the ignition coil and spark plug.

d) Inspect the fault of fuel supply system,

Check whether the fuel pump works (you can hear the sound of fuel pump operation around the fuel tank when starting the engine);

If not:	◆ Check whether the fuel pump relay works properly, ◆ Check whether crankshaft position sensor is connected and works normally, ◆ Use another ECU to judge, ◆ Check the circuit of fuel pump.	
If yes:	1) Inspect whether fuel supply pressure is greater than 220Kpa,	
	2) Insufficient pressure:	◆ Check whether fuel tank has enough fuel, ◆ Check whether it is necessary to replace the gasoline filter (Note: Gasoline filter of EFI is replaced every 7,000 ~ 10,000km), ◆ Check whether fuel supply pipe and return pipe are damaged;
	3) Normal pressure:	◆ Check whether the nozzle control circuit is abnormal, ◆ Whether the nozzle is necessary to be cleaned,

e) Confirm whether the cylinder has excessive fuel.

If yes:	• Fully open the accelerator, turn on the engine, and the engine may work after a few seconds

f) Check whether the clearance of crankshaft position sensor is too large.

16.4.3.3 Symptom - Startup failure with exhaust failure

a) Check whether the high voltage wire of ignition coil is loose,

b) Verify whether the ring gear is loose.

16.4.3.4 Symptom - Unstable idle speed

Idle speed control system:	Inspect whether the idle speed bypass bolt is screwed properly, generally screwed into 2 turns.
Fuel supply system:	Whether fuel pipe has leakage.

16.4.3.5 Symptom - Higher/lower idle speed (idle speed obviously inconsistent with the target idle speed)

Higher idle speed:	◆ When water temperature is lower than 68℃, the system will increase the idle speed to accelerate the heating process, which is normal. Besides, inspect the system as the following steps, ◆ Inspect whether the idle bypass hole is too big, ◆ Whether valve clearance, especially exhaust valve clearance, is too large.
Lower idle speed:	◆ Check fuel level in fuel tank, fuel filter, fuel path pressure and nozzle, ◆ Inspect whether the idle bypass hole is too small, ◆ Inspect whether valve clearance is too small.

16.4.3.6 Symptom - Unstable idle speed with deceleration & shutdown

a) Check valve clearance

b) Check whether the idle speed bypass hole and throttle valve are dirty

16.4.3.7 故障现象—加速无力

Symptom - Incapability to speed up

a) Whether the parameters are normal at idle speed and high idle speed;

b) Check fuel level in fuel tank and fuel filter;

c) Check whether the exhaust system is blocked, e.g., three-way catalytic converter is blocked due to burn fuel or break-up;

d) Inspect fuel path pressure and nozzle;

e) Check whether the fault indicator blinks and whether the reason is that only one cylinder can normally ignite.

16.4.3.8 Symptom - Slight sparking

Check whether the spark plug clearance is in line with the specification (0.6 ~ 0.8 mm)

16.4.3.9 Symptom - Fault indicator blinks but fault code is inconsistent with actual fault

The fault may be caused by loose connection of ground wire of the system; re-connect the ground wire, then disconnect the power cord of the accumulator for 3 minutes and re-connect the cord, and start the engine.

16.4.3.10 Symptom - Abnormally high fuel consumption

a) Inspect the oxygen sensors of two cylinders are installed in place; if loose, the oxygen sensor erroneously judges there is little burning in the cylinder and the fuel is added, resulting in abnormally high fuel consumption.

b) After confirming the engine mechanical components and oxygen sensors are in normal state, operate the engine to observe the reading of oxygen sensor, if always greater than 500 mV at normal water temperature, inspect whether the fuel injector has leakage.

Precautions

- Most parts of EFI are non-repairable and generally replaced if confirmed as being damaged.
- No mechanism is allowed to operate at engine startup (including the accelerator, i.e., start the engine without pulling the accelerator).
- If engine fault indicator blinks in engine running, it is required to find out the causes and eliminate the fault as soon as possible.
- Leaded gasoline shall not be used, because lead will damage the oxygen sensor and three-way catalytic converter.
- For abnormally rapid fuel consumption, it is necessary to resolve the fault immediately, because some matter in the fuel will damage the oxygen sensor and three-way catalytic converter.
- Valve clearance shall not be too small; if the exhaust port is not tightly closed, the service life of three-way catalytic converter will be shortened by higher exhaust temperature.

- When the temperature is lower than 10℃ and the whole vehicle and engine operate at low speed for a long time, the exhaust pipe may have carbon deposit and become black, which is normal, and will be eliminated after a period of high-speed operation. Optionally, appropriate measures can be taken to make the temperature of coolant liquid of the engine within the range of specified temperature.

BX125 Circuit Diagram