JAMES

INSTRUCTION BOOK

FOR

225 cc COLONEL

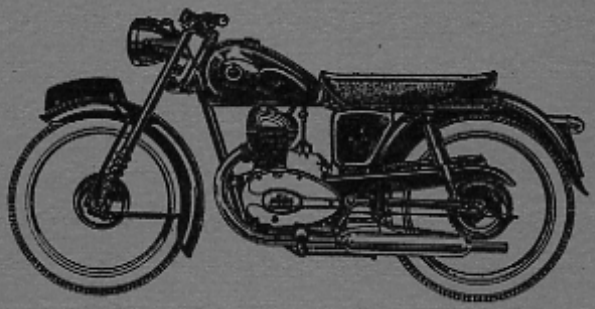

MODEL K12

MANUFACTURERS :

THE JAMES CYCLE CO. LTD.

GREET • BIRMINGHAM, 11 • ENGLAND

TELEPHONE :
VICTORIA 2211 (5 lines)

TELEGRAMS :
"BICYCLES, BIRMINGHAM"

REF. K12/54/A

PRICE 2/6

PRINTED IN ENGLAND

https://www.motomanuals.net/

USEFUL INFORMATION

Cubic capacity (c.c.) = Square of cylinder bore in centimetres × ·7854 × stroke in centimetres × number of cylinders.

Engine R.P.M. = $\frac{166 \times \text{m.p.h.} \times \text{gear ratio}}{\text{radius of rear wheel in inches}}$

Horse Power — A.C.U. formula: 100 c.c. = 1 h.p.
R.A.C. formula: Square of cylinder bore in mm. × number of cylinders ÷ 1613. If the bore is given in inches instead of mm. the division becomes 2·5 instead of 1613.

Compression Ratio — Divide volume of space in cylinder when piston is at bottom of stroke by volume when piston is at top of stroke.

Speed in M.P.H. = $\frac{3600 \times \text{Distance (yards)}}{1760 \times \text{Time (seconds)}}$

Top Gear Ratio = $\frac{\text{Clutch sprocket} \times \text{Rear wheel sprocket}}{\text{Engine sprocket} \times \text{Gear box sprocket}}$

M.P.H. × 88 = feet per minute (60 m.p.h. = 88 feet per second.)

Table of Gradients

Gradient	Per cent.	No. of feet rise or fall in one mile
1 in 5	20	1056
1 „ 6	17	880
1 „ 7	14	754
1 „ 8	12½	635
1 „ 9	11	587
1 „ 10	10	528
1 „ 11	9	480
1 „ 12	8	440
1 „ 13	7¾	406
1 „ 14	7	377
1 „ 15	6½	352
1 „ 16	6¼	330
1 „ 17	6	310
1 „ 18	5½	293
1 „ 19	5	277
1 „ 20	5	264

https://www.motomanuals.net/

JAMES

INSTRUCTION BOOK

225 cc MODEL K12

COLONEL

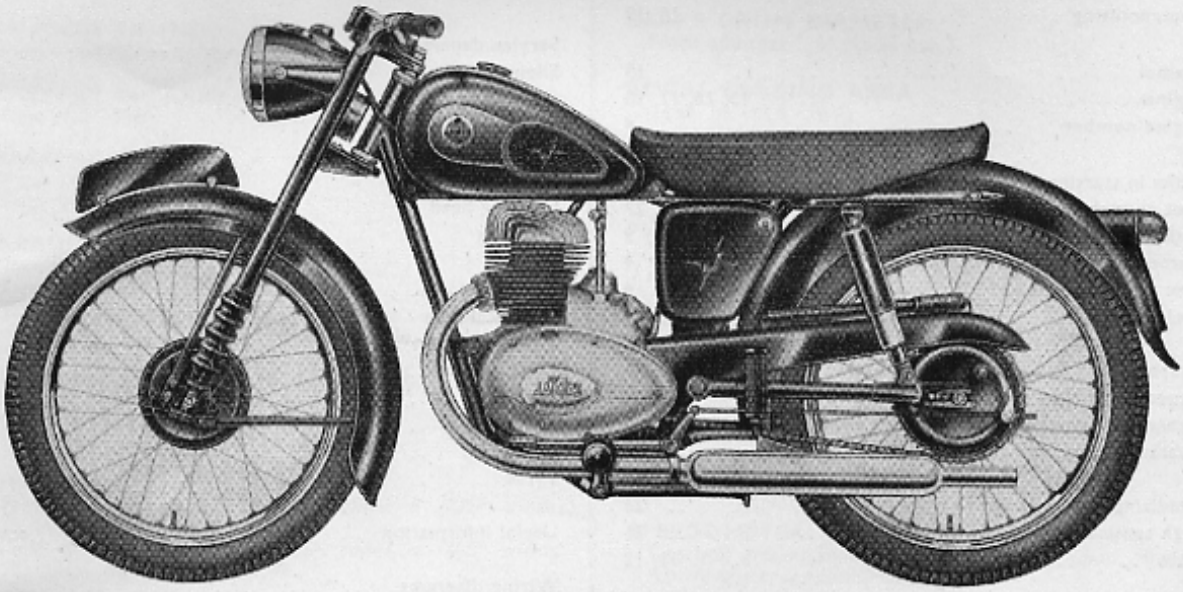

FOREWORD

It gives us great pleasure to deliver to you, together with this booklet, your new James Model K12 Colonel.

Your James has been designed and produced in the light of vast experience in the manufacture of motor cycles, and is built to give you thousands of miles of reliable personal transport.

In operation, the Colonel is as simple as a high efficiency motor cycle can be and only the minimum of attention is necessary to keep it in first-class order.

We stongly advise you to study this booklet carefully in order to become thoroughly acquainted with your machine so that it may be a constant source of pleasure. It is hoped that the information given in the following pages will help both novice and experienced rider.

If you are an experienced motor cyclist you may think this handbook contains nothing you did not already know, but even the owner with many years of motor cycle riding behind him may commit errors in the care and maintenance of a new machine which may cause serious damage. It is the purpose of this booklet to rule out these possibilities, to acquaint you with important details concerning your motor cycle and to indicate those parts which require special care or regular lubrication.

It is in your interest to observe these instructions carefully.

The service life, driving safety, and reliability of your James depend on the care you give it. Please consider this booklet as a guide destined to bring you quickly and safely to your destination.

THE JAMES CYCLE CO., LTD. : BIRMINGHAM, 11 : ENGLAND

https://www.motomanuals.net/

INDEX

CONTENTS

Battery .. 23
Brakes .. 11
Bulbs .. 21

Carburetter .. 28, 29, 30, 31
Chains .. 25
Chromium plating .. 13
Cleaning .. 13
Clutch .. 24
Condenser .. 20
Contact breaker .. 17, 20
Controls .. 5

Decarbonising .. 18, 19

Enamel .. 13
Engine .. 15, 16, 17, 18
Engine number .. 4

Faults in starting .. 6
Foot gear change .. 26, 27
Forks .. 9
Frame number .. 4
Free service scheme .. 4
Fuel .. 5

Gearbox .. 26, 27
General information .. 4
Generator, electrical .. 20
Guarantee .. cover

Headlamp .. 23
High tension coil .. 21
Hubs .. 11, 12

Ignition .. 20

Law .. 4
Lighting .. 20, 21, 22
Lubrication .. 8

Magneto .. 20

Rear suspension .. 10
Recommended lubricants .. 8
Rectifier .. 22, 23
Riding hints .. 6, 7
Rotary exchange service .. 14
Routine attention .. 7
Running-in .. 6

Service department .. 14
Silencer .. 12
Spares and repairs .. 14
Sparking plug .. 22
Speedometer .. 4
Starting .. 6
Steering head .. 10
Stopping .. 6

Transmission .. 25
Technical data .. 3
Timing ignition .. 20
Tracing faults .. 31, 32
Training .. 7
Tools .. 12
Twist grip .. 31
Tyres .. 13

Useful information .. cover

Wiring diagrams .. 21
Wheels .. 11, 12

ILLUSTRATIONS

Battery .. 23
Carburetter .. 28, 29
Chain components .. 25
Clutch .. 24
Contact breaker diagram .. 20
Crankshaft assembly .. 18
Engine—general impression .. 15
Engine and contact breaker .. 16, 17
Forks .. 9
Front hub .. 11

Gearbox .. 26
Generator, electrical .. 20
High tension coil .. 21
Ignition switch .. 21
Lubrication points (engine) .. 19
Primary chain adjuster .. 25
Rear hub .. 12
Rear suspension .. 10
Sparking plug .. 22
Wiring diagram .. 21

https://www.motomanuals.net/

TECHNICAL DATA

225 cc MODEL K12 COLONEL

ENGINE
Villiers Mk. 1H two stroke unit.

CAPACITY
224·44 c.c. (13·73 cu. ins.)

STROKE
72 m.m. (2·834″).

BORE
63 m.m. (2·480″).

COMPRESSION RATIO
7 to 1.

IGNITION TIMING
Points commence to open $\frac{5}{32}$″ before T.D.C.

CONTACT BREAKER
Gap, ·012″/·015″.

SPARKING PLUG
Type, Lodge HH14.
Gap. ·018″/·025″.

CARBURETTER
Type, Villiers S25.
Needle, No. 3½.
Throttle, No. 2½.

SPROCKETS
Engine : 20 teeth x $\frac{3}{8}$″ pitch.
Clutch : 43 teeth x $\frac{3}{8}$″ pitch.
Gearbox : 18 teeth x $\frac{1}{2}$″ pitch.
Rear wheel : 52 teeth x $\frac{1}{2}$″ pitch.

CHAINS
Primary drive : $\frac{3}{8}$″ pitch x $\frac{1}{4}$″ roller x ·225″ width. 60 links. Renold No. 110038.
Final drive : $\frac{1}{2}$″ pitch x ·335″ roller x ·305″ width. 125 links. Renold No. 110046.

CHAIN ADJUSTMENTS
Primary chain : $\frac{1}{4}$″ whip at tightest point.
Rear chain : $\frac{3}{4}$″ to $\frac{1}{2}$″ whip at tightest point with rider astride machine.

GEARBOX RATIOS
1 to 1 — 1·32 to 1 — 1·9 to 1 — 3·06 to 1.

GEAR RATIOS
Top : 6·21 to 1.
Third : 8·2 to 1.
Second : 11·8 to 1.
Bottom : 19·05 to 1.

BIG END BEARINGS
Roller $\frac{1}{4}$″ x $\frac{1}{4}$″ (26 steel).

HUB BEARINGS
15 x 35 x 11 m.m. front and rear No. 6202.

STEERING HEAD BEARINGS
$\frac{1}{4}$″ balls (17 top, 17 bottom).

WHEEL RIM SIZES
Front and rear : WM1—19.

TYRE SIZES
Front and rear : 3·00 x 19.

TYRE PRESSURES — NORMAL
Front, 18 lbs. Rear, 24 lbs.

SPOKES

Front L.H. side (18)	10 s.w.g. x $8\frac{5}{8}$″.
Front R.H. side (18)	10 s.w.g. x $7\frac{1}{4}$″.
Front nipples (36)	10 s.w.g. x ·250″.
Rear L.H. side (18)	10 s.w.g. x $7\frac{3}{8}$″.
Rear R.H. side (18)	10 s.w.g. x $8\frac{11}{16}$″.
Rear nipples (36)	10 s.w.g. x ·250″.

BRAKE DRUM DIAMETER
Front and rear : 6″ (15·25 c.m.).

TOTAL BRAKING AREA
22 sq. in. (83·9 c.m.²).

FUEL TANK CAPACITY
2¼ imperial gallons (10 litres approx.).

FUEL MIXTURE
20 parts petrol to 1 part of oil, viz. approx. $\frac{1}{8}$ pint oil or 4 filler cap measures to 1 gallon petrol.

GEARBOX OIL CAPACITY
Fill to level mark on dipstick. Approx. 1·2 pints.

CHAINCASE OIL CAPACITY
Fill to drain plug level on primary case.

REAR SUSPENSION UNITS OIL CAPACITY
1 fluid ounce per unit (28·4 c.c.)

SPEEDOMETER
Gearbox driven, Smith's 80 m.p.h. or 140 k.p.h., chronometric trip type, illuminated.

SPEEDOMETER CABLE LENGTH
36″ (91·5 c.m.)

WHEELBASE (Static)
50″ (127 c.m.).

SADDLE HEIGHT
30″ (76·2 c.m.).

LENGTH OF DUAL SEAT
24″ (63 c.m.).

GROUND CLEARANCE
5½″ (14 c.m.).

WIDTH OVER HANDLEBARS
25½″ (65 c.m.).

OVERALL LENGTH
78″ (198 c.m.).

APPROX. WEIGHT
275 lbs. (124 kgms.).

https://www.motomanuals.net/

GENERAL INFORMATION

FRAME AND ENGINE NUMBERS

Every James motor cycle is stamped with frame and engine numbers and it is in your interests to record these numbers in the spaces given below. These numbers enable identification of the machine and must be quoted when ordering spares and in any documents or correspondence relating to your motor cycle.

FRAME NUMBER : This will be found stamped on the left-hand side of the steering head lug.

ENGINE NUMBER : This appears on a metal plate fitted on the top of the left-hand aluminium alloy crankcase.

RECORD YOUR FRAME AND ENGINE NUMBERS HERE FOR REFERENCE

FRAME	ENGINE

FREE SERVICE SCHEME

(UNITED KINGDOM)

All owners of **NEW MODELS** are entitled to one **FREE SERVICE AND INSPECTION** at 500 miles, or, at latest, three months after taking delivery.

This service is arranged by the supplying dealer to whom the **Free Service Voucher** must be handed. This voucher will be found in the tool box upon taking delivery of a new motor cycle.

The **INSPECTION AND SERVICE** consists of :

(a) Check, and, if necessary, adjust :
  (1) Contact breaker points.
  (2) Sparking plug.
  (3) Clutch.
  (4) Chains.
  (5) Brakes.
  (6) Forks and steering head.
  (7) Alignment of wheels.
  (8) Tyre pressures.

(b) Tighten all external nuts and bolts, including cylinder bolts.

(c) Check all lighting equipment.

(d) Clean out carburetter and adjust mixture.

(e) Adjust and lubricate all cables.

(f) Grease all nipples.

(g) Check oil level in front chaincase.

(h) Top-up gear box.

(i) Test machine on the road.

NOTE.—Oils, greases and materials used are chargeable to the customer.

THE MACHINE AND THE LAW

(UNITED KINGDOM)

Every motor cycle used on the public roads of Great Britain must be registered and carry the registration numbers and licence disc allotted to it. The dealer, from whom the machine is bought, will, generally, attend to all matters legally essential before it is used on the public roads.

TO REGISTER A NEW MACHINE

Send to the Local Registration Authority the following :

(a) Form " RF1/2 " duly completed.

(b) The certificate of insurance.

(c) The invoice you received from your dealer when you purchased the machine.

(d) The appropriate registration fee.

In due course you will receive :

(1) A Registration Book. (Commonly called the " log " book).

(2) A Licence Disc.

(3) Your Insurance Certificate.

(4) Your Invoice.

The Registration Book and the Licence Disc will bear the registration numbers that have been allotted to your machine and will also show the date the Road Licence expires. Your number plates must then be painted, in white upon a black background, with the registration numbers in characters of even thickness as follows :

The numbers on the front plate must be $1\frac{3}{4}$" high, $1\frac{1}{4}$" wide and $\frac{5}{16}$" thick with spaces of $\frac{1}{2}$" between each two characters. The numbers on the rear plate must be $2\frac{1}{2}$" high, $1\frac{3}{4}$" wide and $\frac{3}{8}$" thick with spaces $\frac{1}{2}$" between each two characters.

The Licence Disc must be enclosed in a watertight container, having a transparent front, and this must be fixed to the machine in a conspicuous position, near the front and on the left-hand side.

Although it is not legally necessary to carry your Driving Licence, Insurance Certificate and Registration Book while driving your machine, it should be noted that Police Officers have authority to ask for the Driving Licence and Insurance Certificate at any time.

SPEEDOMETER

A speedometer **MUST** be fitted to all motor cycles over 100 c.c. It is supplied as standard equipment on the James Colonel.

LAMPS

During the official **" LIGHTING UP "** hours the machine must exhibit a white light facing forwards and a red light facing rearwards. The rear number plate must be adequately illuminated by a white light.

Each electric light bulb **MUST** be marked with its " Wattage." (Beware of cheap, imported, bulbs that do not have this marking).

All motor cycles made by us have electric equipment that complies with the law regarding position, size of bulbs, marking on bulbs and the correct illumination of the rear number plate.

THE DRIVER AND THE LAW

(UNITED KINGDOM)

The driver of a motor cycle **MUST** be **INSURED** against Third Party Claims and **MUST** be able to produce an **INSURANCE CERTIFICATE** showing that such an insurance is in force.

If your Insurance Certificate specifies you can only drive one particular machine you **MUST NOT DRIVE** any other machine unless its owner has a current Certificate covering **" ANY DRIVER "** and it is advisable to remember that, in the absence of such a provision the penalties for doing so are very heavy.

https://www.motomanuals.net/

The driver of a motor cycle **MUST** hold a current **DRIVING LICENCE.** If you are a learner and hold a Provisional Driving Licence, your machine must show, front and back, the standard "L" plates in red and white and you must not take a **PILLION PASSENGER** unless that passenger is the holder of a current **UNRESTRICTED** driving licence. As soon as you receive your driving licence, sign it in the appropriate place and do so each time it is renewed. It is an offence not to.

Make sure you are well acquainted with the recommendations set down in the "Highway Code," a copy of which can be obtained from any main Post Office.

POSITION, FUNCTION AND OPERATION OF CONTROLS

Newcomers to motor cycling and indeed all who are making their first acquaintance with the "Colonel" are strongly advised to acquire a thorough knowledge of the positions and functions of the controls. Only when you are able to operate these automatically without having to grope for them or reflect on how to use them will you be a really safe rider.

FILLER CAP. On top of fuel tank. Incorporates oil measure for refuelling. (Four measures to one gallon). Screws on and off.

FUEL TAP. On left under tank. Pull knob to turn fuel ON. Push in to turn fuel OFF. Always push knob to OFF position when stopping for any length of time.

AIR SHUTTER. Operated by small lever at rear of carburetter cover. Close to enrichen mixture for starting. Use in conjunction with tickler.

TICKLER. Small knob on carburetter cover. Depress two or three times to provide rich mixture for starting.

IGNITION SWITCH. Operated by detachable key in right-hand engine crankcase extension. This is a thief proof device which "earths" the ignition circuit and although it is not an essential feature of the ignition system as on "battery-coil ignition" motorcycles, it is advisable to use it when parking away from home.

THROTTLE TWIST GRIP. On right handlebar. Controls speed of engine. Twist towards rider to open. Away from rider to close.

KICK STARTER. Vertical lever with folding crank on right of gearbox. Use to start engine.

CLUTCH LEVER. Large lever on left handlebar. Pull towards handlebar to release engine drive from rear wheel. Use when moving away from rest and also when changing gear. Always let the clutch in gently to prevent transmission snatch.

GEAR CHANGE PEDAL. Horizontal lever in front of right-hand footrest. Move UP to select a lower gear. Move DOWN to select a higher gear. Neutral will be found between first (bottom) and second gear.

Position of gears from neutral (or free engine) :

First (or bottom gear)	...	UP.
Second gear	...	DOWN.
Third gear	...	DOWN AGAIN.
Fourth (or top gear) ...	...	DOWN YET AGAIN.

The pedal will always return to the same position and foot should be removed from lever between each gear change. Always de-clutch when changing gears.

FRONT BRAKE LEVER. Large lever on right handlebar. Grip to operate front brake. Normally applied in conjunction with rear brake.

REAR BRAKE PEDAL. To front of left-hand side footrest. Press down to operate rear brake.

LIGHTING SWITCH. (Rectifier/Battery lighting set — A.C.— D.C. equipment). In top of headlamp. Switch has four positions :

OFF	No lamps in use.
P	Parking lights in use — current supplied by battery.
H	Headlamp, tail light and speedo light in use, current supplied by battery.
DIRECT	Headlamp, tail light and speedo light in use — current supplied from flywheel generator with engine running.

DIPSWITCH. On left handlebar. Deflects main headlamp beam downwards and to the left. Prevents dazzling on-coming drivers.

HORNBUTTON. In unit with dipswitch on left handlebar.

AMMETER. Instrument in front of lighting switch. Indicates flow of current.

TRIP SPEEDOMETER. Small lever behind speedo. Used to reset trip mileage indicator to zero.

PREPARING FOR THE ROAD

While all reasonable precautions are taken at the factory to ensure that each machine leaves the works in perfect order, the new owner should satisfy himself on the following points when taking delivery from his dealer.

Ascertain that the gearbox and primary chaincase have their correct quantity of oil. Check the battery for a full charge, see that the wheels spin freely, and that the brakes are properly adjusted. Test the front and rear springing for freedom and extent of movement and check tyres for correct pressures.

FUEL

PETROIL MIXTURE. Fill the tank with a mixture of ONE part of oil to TWENTY parts of petrol.

The filler cap fitted to James machines incorporates an oil measure. Four oil measures per gallon of petrol provides a ratio of ONE part oil to TWENTY parts petrol.

It is advisable for the mixture to be prepared and well stirred before being introduced into the tank. Any fuel is suitable, best grades being preferable. Benzole mixtures can be used with complete safety.

Several countries have special petroil mixing pumps, and most garages are now equipped with petroil mixing cans for two-stroke motor cycles. Owners are strongly advised to ask for this service when purchasing petrol to ensure positive mixing before filling the tank.

If the filling station does not offer a petroil mixing service, it is best to fill the tank with petrol first and to pour the oil in afterwards. The machine should then be shaken from side to side to mix the contents of the tank.

Always remember to push the fuel cock to OFF before refuelling. It pays to buy oils of good repute. The brands recommended are specified in this booklet. (See page 8)

https://www.motomanuals.net/

STARTING

See that there is sufficient fuel in the tank.

Make sure the ignition switch is turned ON.

Ensure gear lever is in NEUTRAL by rolling machine slightly forwards and backwards.

(Neutral is between bottom and second gear).

Pull fuel cock to ON position.

Close shutter on air cleaner and flood carburetter by depressing tickler extension on carburetter cover.

Open twist grip about a quarter of its travel.

Standing over machine, sharply depress kickstarter two or three times.

When engine fires open the air shutter gradually as engine warms up.

Re-starting when the engine is hot will require no flooding of the carburetter, neither will it be necessary to close the air shutter.

FAILURE TO START

If repeated kicks meet with no success after flooding (when cold), turn off fuel supply, open throttle wide, and clear cyclinder of excessive mixture by giving a number of kicks to starter lever. Now turn on fuel supply, and after opening throttle a little, try again. If not successful, the sparking plug will probably be found to be wet. If so, remove and dry out, and turn over engine quickly after having removed the drain plug situated at bottom of crankcase, so that accumulated mixture can be blown out. If still not successful after having replaced drain plug the trouble must be found elsewhere, and reference should be made to the "Fault Finding Chart."

FAULTS IN STARTING

Errors often made whilst starting motor cycles are as follows :

Opening throttle too wide : this destroys the advantage of a rich mixture.

Failure to lean the machine slightly to the left, so that pressing of the foot on the kickstarter causes rider and machine to overbalance.

Failure to appreciate that word "kickstarter" is a misnomer. What is really required is a sharp but firm swinging movement, the force on the crank being almost constant throughout its travel. A frantic jab does not produce the required spin of the engine.

Tickling the carburetter insufficiently.

These faults are easily corrected with care and will result in greatly improved starting.

It is **NOT** advisable to start the machine on the stand.

RIDING

THE FIRST RUN. Novices are recommended to drive the machine slowly in bottom gear (for short distances only, of course) whilst making themselves familiar with the controls. This is best done by bringing the machine to rest and then restarting by a gradual engagement of the clutch several times. When this can be done without stopping or racing the engine, speed can be increased slightly and a change to the next gear made.

Raise the clutch lever and move the foot gearchange pedal to the required position, after which the clutch lever must be gently released, while the throttle should be opened slightly to take the drive on the higher gear.

The change from a high gear to a lower gear is made in a similar manner. Remember that when in motion and changing to a higher gear, the engine speed must be reduced by partially closing the throttle but when selecting a lower gear the engine speed should be increased to ensure a smooth and silent change. Always fully declutch before operating the gear change pedal. A little practice will probably be necessary in order to change gear with ease and certainty, with all movements correctly synchronised. The gear change mechanism on a new machine is generally a little stiff and will ease considerably when the machine has been run-in. During the running-in period, PRESS the gears in firmly.

STOPPING

Before slowing down glance to the rear to ascertain what vehicles are following and if necessary give the signal "I am going to slow down." (Full details of road signals will be found in The Highway Code available from H.M. Stationery Office).

To stop the machine, close the throttle, apply the brakes and when speed is down to a few miles per hour, raise the clutch. The engine thus assists the brakes in slowing down. Most slowing down, e.g., at traffic lights, can be done by allowing the engine to act as a brake and using the brakes themselves for the last few yards only. When the machine is to be left standing for any length of time, it is advisable to turn off the fuel supply, when approaching destination, allowing the engine to use up the supply of fuel in the carburetter while coming to rest.

This avoids the possibility of fuel draining into the engine with subsequent starting difficulties.

RIDING IN TRAFFIC

In slow moving traffic engage lower gears. This permits the engine to run smoothly and enables overtaking to be accomplished in the minimum of time. The engine must never be allowed to labour, and the judicious selection of the right gear will prolong the life of the engine and the transmission system. Slipping the clutch should be avoided. Whenever in doubt about overtaking, always hang back.

RUNNING-IN

The manner in which a new motor cycle is driven during the first 1,000 miles (1,600 kms.) can make or mar its eventual performance and useful life, and owners are therefore strongly advised to exercise great care during the vital "running-in" period. In a new machine, despite the most careful manufacture and assembly, each bearing surface has microscopic idiosyncrasies not entirely suited to the opposite surface and the initial period of "light duties" will give those working parts a mirror finish impossible to achieve by machinery.

Two-stroke engines are quickly run in, owing to the simple and efficient design. However, here, as in everything else, treatment must follow the dictates of common sense, and not too much should be attempted on the first ride. Do not exceed 40 m.p.h. in top gear for the first 100 miles or so and limit your throttle openings to two-thirds in any gear for the first 500 miles.

Sustained high speed should **not** be indulged in for at least 1,000 miles, when it will probably be time to adjust the contact-breaker point gap. How to do this is shown on page 20.

https://www.motomanuals.net/

RIDING HINTS

One of the most important rules to remember is : Before moving off, pulling out to overtake, turning right and turning left, glance over your shoulder to make sure it is safe to do so and if necessary give the correct signal.

If at first bottom gear will not engage whilst the machine is stationary, do not resort to force — simply raise the clutch and move the machine backwards and forwards for a second or two, then try again. In time this condition will disappear.

Take pride in making a smooth start ; it is not clever or wise to race the engine and then let the clutch in suddenly to make a flying start. Make a smooth getaway after first glancing to the rear and signalling your intention.

Always drive on the engine and not on the brakes, thereby saving expense on brake liners. Remember that an engine in low gear is a safe and sure brake and that skidding is well-nigh impossible when using it so.

Change gear on hills **BEFORE** the engine has commenced to labour ; a good driver will learn to anticipate such a condition, and change down early.

When changing gear move the foot pedal to the full extent of its travel firmly and smoothly, at the same time as the clutch is disengaged.

Cornering. When approaching an uncertain bend at speed, change down if necessary and brake **BEFORE** entering the curve. On a left-hand bend, ease over near the crown of the road in order to sweep in close to the verge once round the corner. On a right-hand bend, always keep well in to the verge. Never accelerate into a bend.

When using the brakes, apply gentle pressure at first, increasing in strength as the road speed decreases.

Use your full headlight when riding at night unless in brightly lit streets.

Make full use of the dipswitch whilst riding at night ; this is a " courtesy control " and its use will be appreciated by oncoming drivers.

Always reduce speed when your visibility is lowered.

Many accidents are caused by rash over-taking. Be cautious, remembering that a small engine has not the acceleration of a larger machine. Every car driver has a blind spot in his mirror within which he cannot see you. Make sure that he knows you are there if you are overtaking. Similarly glance behind yourself before pulling out.

Remember that pedestrians, young or old, are the most likely to make unexpected changes in direction and speed, step off pavements, come from behind stationary vehicles or, in country districts, suddenly appear round the curve of a blind bend. Constant observation and anticipation is required to avoid them.

TRAINING FOR BEGINNERS

Skill in motor cycling is not a gift. It has to be learnt and practised. Many clubs operate a scheme in co-operation with the R.A.C. and the A.C.U. for teaching young motor cyclists and beginners to become expert. For details apply to the Motor Cycle Department, Royal Automobile Club, 85 Pall Mall, London, S.W.1.

ROUTINE ATTENTION

Observing the servicing rules painstakingly means trouble free running of your James machine and will preserve its value, while at the same time very little will be needed in the way of replacement parts.

Lubrication and adjustment of cycle and engine parts is of great importance and it is in your interest to carry out these simple jobs in accordance with the ROUTINE SERVICE PLAN given below. A list of recommended lubricants is given on page 8.

AFTER THE FIRST 200 MILES (320 kilometres)

Examine the contact breaker points (see page 20).

Check nuts and bolts for tightness.

Check adjustment of rear chain (see page 25).

Check steering head bearings (see page 10).

EVERY 500 MILES (800 kilometres)

Inspect oil level in gearbox and primary chaincase. If necessary top up with recommended oil. FILL TO DIPSTICK NOTCH ON GEARBOX FILLER CAP AND TO OIL LEVEL PLUG ON CHAINCASE.

Oil front fork sliders with oil gun.

WEEKLY

Inspect tyres and check pressures (see page 13).

EVERY MONTH (every Fortnight in Summer)

Clean battery terminals and top-up with distilled water (see page 23).

EVERY 1,000 MILES (1,600 kilometres)

Check, adjust and oil control cables, levers and twistgrip.

Check adjustment of rear chain. If rollers appear dry, oil with brush. In winter lubricate more frequently. If chain has collected much dirt remove and clean (see page 25).

Check adjustment of head bearings.

Oil brake pedal pivots.

Clean and re-oil carburetter air filter.

Clean banjo filter gauze.

Check and adjust sparking plug gap.

Check contact breaker points gap.

EVERY 5,000 MILES (8,000 kilometres)

Drain and refill chaincase and gearbox, whilst engine is warm. DO NOT OVERFILL.

Make thorough examination of lighting cables.

OCCASIONALLY

Oil brake cam bearings to ensure smooth application. Oil too such parts as the rear brake lever, cable or rod pivots, and centre stand pivots.

Do **NOT** oil wheel hub bearings. (See page 11 " Hubs and Bearings ").

Decarbonise when the need is apparent (see pages 18 and 19).

https://www.motomanuals.net/

LUBRICATION

Oil is the life blood of your motorcycle, and it is essential that your machine be continuously and correctly lubricated in order to secure maximum performance and low running costs. Strict attention and regular use of the recommended lubricants will reduce friction and wear to the minimum.

ENGINE. The Petroil system of lubrication employed for the two-stroke engine is practically fool proof. A definite proportion of oil is mixed with the petrol in the tank and passed through the carburetter in an atomized form. The recommended ratio is 20 : 1 but under arduous conditions, the ratio can be stepped up to 16 : 1. When the charge is in the crankcase a proportion of oil separates out as the result of heat and the driving action, and remains in the crankcase where it is splashed on to the moving parts by the rotating crankshaft. The remaining oil in the petroil mixture entering the combustion chamber, serves to lubricate the piston and cylinder wall. As the amount of fuel used increases with the power output, it will be seen that a greater quantity of oil is supplied under arduous conditions.

GEARBOX. The power lost in the transmission is an appreciable percentage of the total power of the engine and only by correct lubrication can the loss be reduced to the minimum. It is impossible to avoid contamination of the lubricating oil with minute particles of metal worn from the gear teeth and operating parts. If these particles are allowed to accumulate in the box, they will accelerate wear of gears and bearings. It is therefore desirable to drain and replenish the gearbox with fresh oil every 5,000 miles. Always drain after a run when the oil is warm and runs out easily. Check the oil level every 500 miles and top up to notch on dipstick with the filler plug laid on top of the gearbox filler hole and not screwed down. Overfilling will not improve lubrication and is liable to cause leakage.

PRIMARY CHAINCASE. The primary chain and clutch run in oil and careful maintenance of the oil level will ensure smooth transmission. To check the oil level remove level plug and pour oil through filler plug until it runs out of the lower hole. Drain and replenish every 5,000 miles.

FORKS. The telescopic fork sliders operate in Tufnol bushes and should be lubricated with an oil gun (not grease) every 500 miles through the four oil nipples provided.

HUBS AND STEERING HEAD. Wheel and steering head bearings are packed with grease when new and require no attention for 5,000 to 10,000 miles when they should be dismantled, cleaned out with *paraffin, and packed with fresh grease.

CYCLE PARTS. Although we advise owners to lubricate cycle parts every 1,000 miles, more frequent attention may be desirable during wet weather in order to prevent damage due to rust and to ensure smooth operation of controls. Engine oil is suitable for all cycle parts. Control cables should be lubricated regularly particularly where they emerge from the outer casing as it is here that breakages can occur if the cables are running dry. Other important points are brake cam pivots, rear brake pedal pivots and the handlebar control levers.

REAR CHAIN. If the rollers appear dry, oil with a brush. It is advisable to wash the chain with *paraffin periodically to remove mud, grit, etc. and to coat with a small amount of recommended grease. Excess of lubricant on the outside of the chain will merely collect dirt and cause rapid wear of the chain and also sprocket teeth.

* Kerosene

RECOMMENDED LUBRICANTS

	SHELL	WAKEFIELD	VACUUM	B.P.	ESSO
ENGINE ... ... GEARBOX ... ... CHAINCASE ... ... FORKS — CYCLE PARTS ...	Shell X-100 30	Castol XL	Mobiloil A	Energol SAE 30	Essolube 30
REAR CHAIN AND GREASE GUN	Shell Retinax A or CD	Castrolease Graphited	Mobilgrease No. 2	Energrease C 3	Esso Grease Esso Chassis Grease
WHEEL HUBS AND STEERING HEAD BEARINGS ...	Shell Retinax A or RB	Castrolease Heavy	Mobil Hub Grease	Energrease C 3	Esso Grease Esso Bearing Grease

Rear suspension hydraulic damping : Should rear suspension units ever require topping up, use any of the above brands in SAE 10 or SAE 20 (see appropriate instructions).

ALWAYS USE A BRANDED OIL OF GOOD REPUTE

https://www.motomanuals.net/

FORKS

Regular lubrication of the sliders is the only attention necessary to keep the forks in first-class working order. Use SAE30 engine oil sparingly, every week. The action is by spring only and in the design of this fork wearing parts have been reduced to the bushes in the fork tube assembly and the sliders themselves. It will be seen, therefore, that need for replacement will only arise after a very lengthy mileage and then it is preferable that the forks themselves be returned to the works for the necessary repairs. The latter will be necessary as the bushes in the tube assembly are line reamered after being fitted and for this reason replacement bushes are only supplied to overseas customers.

There is a single tri-pressure coil spring in each leg, the bottom of which is anchored inside the slider and held in position by twisting the spring from one-and-a-half to two complete turns clockwise. The top of the spring is then held by another anchorage which in turn is attached to a cup telescoping in the fork tube assembly. This latter cup is bolted to the top of the tube. The three-rate loading of the spring takes care of all road surfaces.

DISMANTLING

To dismantle forks, first place machine on rear stand and arrange a box or similar object under the engine so that the front of the machine is well clear of the ground. Next take away the front wheel as described on page 11, and then remove front mudguard with stays attached. Remove the handlebar centre clips and detach clutch cable and dip-switch leads. The bar itself can then be laid on the tank, giving immediate access to the head stem domed nut. By unscrewing this with its right-hand thread it only remains to take away the two bolts holding the fork top plate to the tubes to enable the plate to be tapped off lightly. Remember to tap each side a little at a time to prevent distortion. The speedometer can now be uncoupled — flex and lighting. The head bearing is now in full view. By removing the shims and unscrewing the thin nut the adjusting race can be taken off, leaving the balls — seventeen in each race — but at this stage some support should be given to the head stem to prevent its falling involuntarily. Make careful note of the number of shims fitted by selective assembly between the top race and top plate, and make sure that they are re-positioned in this order when re-assembling.

The stem can now be withdrawn from the head of the machine if so desired, but in that event the headlamp, of course, will need to be taken off and protected from external damage. At this stage it will be possible to deal with the fork as a sub-assembly and for this purpose the head stem can be held lightly in a vice. The plastic gaiters should be loosened and each slider telescoped to extend the spring at the top end with the anchorage attached. As mentioned previously, the spring should be unscrewed anti-clockwise from the slider and this will then enable the latter to be withdrawn from each tube without further hindrance.

When re-building, the plastic gaiters should be fitted 2" from the bottom fork ends, and the top should be just below the bottom bush grease nipple.

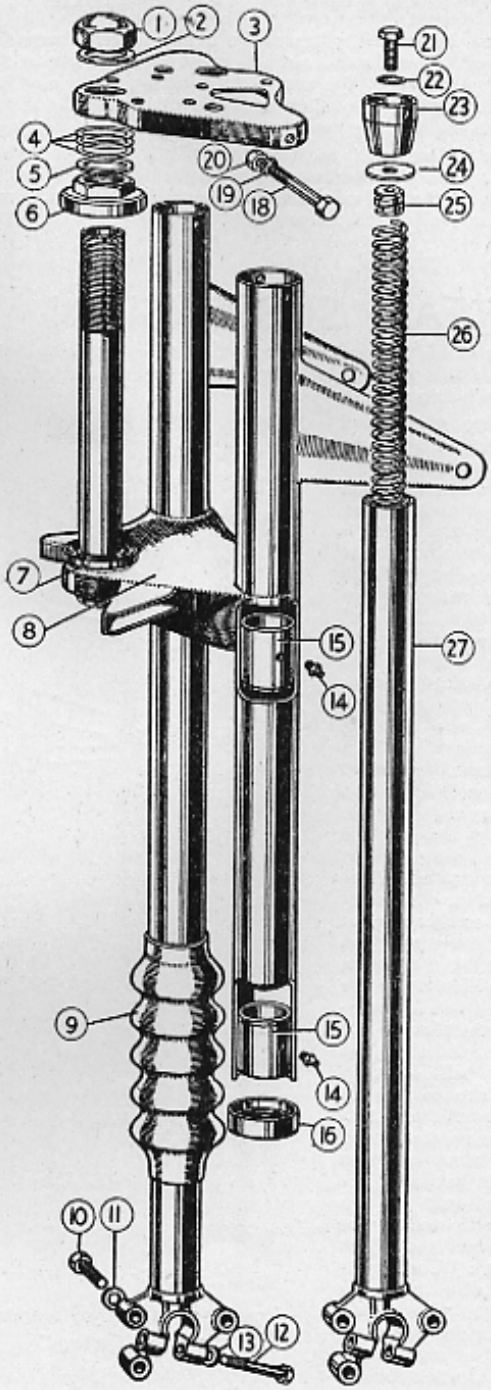

COMPONENT PARTS

1. Domed nut — steering stem.
2. Plain washer, 1" dia.
3. Top plate.
4. Shims ·005" thick.
5. Plain washer, 1" x 16 s.w.g.
6. Adjusting race.
7. Fork crown race.
8. Fork crown, steering stem and outer tubes assembly.
9. Plastic bellows.
10. Mudguard stay bolt.
11. Mudguard stay washer.
12. Fork end pinch bolt, $\frac{5}{16}$" BSF.
13. Fork end pinch washer, $\frac{5}{16}$" BSF.
14. Oil nipples.
15. Bearing bush — Tufnol.
16. Oil seal.
18. Top plate bolt, 2" x $\frac{1}{4}$" x 26.
19. Shakeproof washer.
20. Hexagon nut.
21. Top spring adaptor bolt $\frac{5}{16}$" BSF.
22. Shakeproof washer.
23. Top spring support cup.
24. Plain washer.
25. Top spring adaptor.
26. Triple rate spring.
27. Inner slider and fork end.

https://www.motomanuals.net/

STEERING HEAD ADJUSTMENT

The head bearing is adjusted in the following manner: loosen head stem domed nut and carefully screw down the thin nut underneath the top plate until excessive play has been taken up. Do not adjust head bearing too tightly, as this will make the steering heavy and may also ruin the bearings.

Need for adjustment is indicated by a slight "bump" when upward pressure is exerted on the handlebar ends. Test for slackness at the end of the first 200 miles (320 kms.), and thereafter every 1,000 miles (1,600 kms.).

REAR SUSPENSION

The rear wheel is mounted in a fork pivoting just behind the gearbox; this works on rubber torsion bushes which should never be lubricated.

The outer plated and enamelled tubes are merely dust covers. The damper unit consists of two concentric tubes, the outer one which is an integral part of the bottom anchorage is in fact the reservoir for the SAE 10 oil (28·4 c.c.) The inner tube is detachable, having a ball-seated valve at the lower end and a metering hole 1" from the bottom. The plunger rod is screwed and locked into the aluminium top anchorage. On the bottom of the rod is a cut-away brass piston which forms the seating for a valve, the latter having a certain amount of free movement on the rod for a purpose described later. As the spring unit is compressed the plunger rod descends, and since the bottom ball is then seated, the oil has to pass through the metering hole supplemented by the amount which can pass between the valve and seat (on the downward stroke the valve moves away from the seat). Conversely when the unit is depressed the spring action causes rebound, so that as the piston ascends the ball valve is opened to take in oil supplemented by the intake through the metering hole. On the upward stroke, however, the valve will be seated against the piston and will then not permit of such a free escape of oil as on the downward stroke. It is, therefore, on the rebound that the advantage of the hydraulic action is most effective.

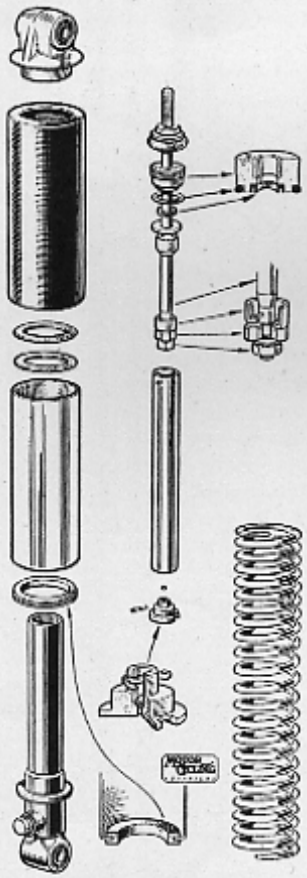

Drawing reproduced by courtesy of "Motor Cycling"

Since the oil is in constant circulation, loss will be negligible, if however topping up is necessary the units should be removed from the frame, drained and refilled in an inverted position.

SEE ALSO "ROTARY EXCHANGE SERVICE" page 14

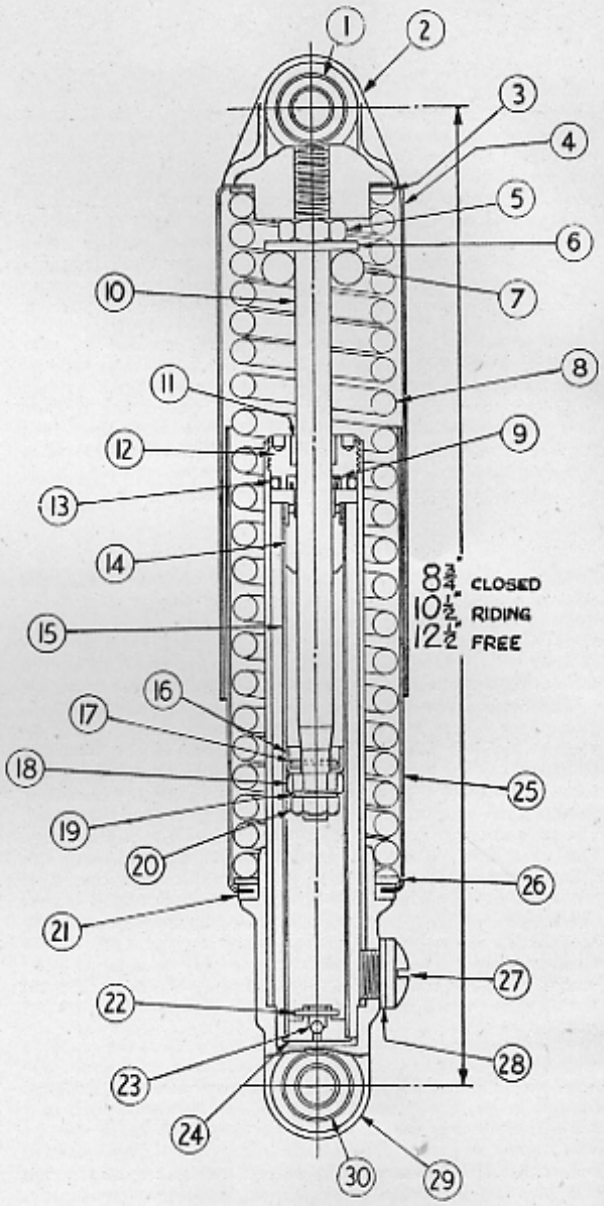

1. Top rubber torsion bush.
2. Top spring anchorage.
3. Washer for spring cover.
4. Outer cover.
5. Locknut.
6. Buffer washer.
7. Rubber buffer.
8. Coil spring.
9. Inner gland seal.
10. Damper rod.
11. Damper gland bush.
12. Damper gland.
13. Outer gland seal.
14. Damper rod guides.
15. Damper tube.
16. Damper valve.
17. Damper valve pin.
18. Damper valve seats.
19. Plain washer.
20. Hexagon nut.
21. Grummet for inner spring cover.
22. Split pin for valve body.
23. Non-return valve ball.
24. Non-return valve body.
25. Inner cover.
26. Washer for spring cover.
27. Filler and drain plug.
28. Plug washer.
29. Bottom spring anchorage
30. Bottom rubber torsion bush.

https://www.motomanuals.net/

HUBS AND BEARINGS

Both hubs are greased when new and no further lubrication will be required for five or ten thousand miles, when it is advisable to dismantle the hubs for attention to the bearings. The old grease should then be cleaned out with petrol or paraffin and the bearings regreased. When dismantling and assembling the hubs refer to exploded drawings. If bearings show any sign of wear, fit replacements. The need to exclude dirt from the bearings cannot be over emphasised.

FRONT HUB

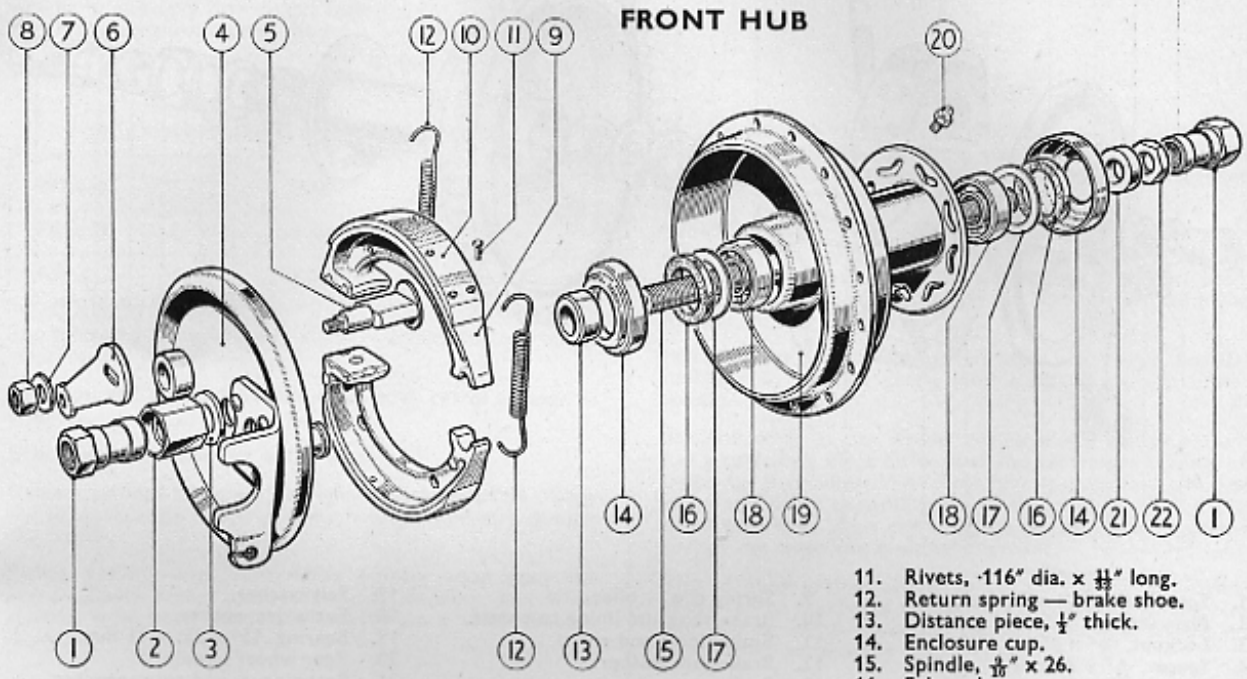

1. Spindle nut.
2. Recessed locknut, $\frac{13}{16}$" x $\frac{9}{16}$" dia.
3. Plain washer, $\frac{3}{16}$" dia.
4. Brake backplate.
5. Brake cam and washer.
6. Brake cam lever.
7. Plain washer, $\frac{9}{16}$" dia.
8. Hexagon nut, $\frac{9}{10}$" x 26.
9. Brake shoe.
10. Brake lining.
11. Rivets, ·116" dia. x $\frac{11}{32}$" long.
12. Return spring — brake shoe.
13. Distance piece, $\frac{1}{2}$" thick.
14. Enclosure cup.
15. Spindle, $\frac{9}{10}$" x 26.
16. Felt seal.
17. Enclosure washer.
18. Bearing, 15 x 35 x 11 m.m.
19. Hub shell and brake drum.
20. Grease nipple, $\frac{1}{4}$" x 26.
21. Distance piece, $\frac{5}{16}$" thick.
22. Locknut, $\frac{3}{16}$" x $\frac{9}{14}$" dia.

FRONT WHEEL REMOVAL

To remove front wheel, place machine on the stand and uncouple the brake cable from brake cam lever. Unscrew the pinchbolts on either side of fork legs under the wheel axle, but leave loosely in position to take the weight of the wheel later on. Now remove the axle nut on the **left side** first and then the other on the off side, after which the wheel will come away on taking out the pinchbolts. When putting the wheel back in the machine, first tighten both wheel nuts, followed by locking the pinchbolt on the **right side** only. Next, put up the stand, and standing astride the machine, depress the forks vigorously a few times to enable the nearside leg to assume its own lateral position on the wheel nut, which is sleeved. It can then be kept in position by locking the pinchbolt on this side. The importance of following this sequence, particularly when re-assembling, must be emphasised as otherwise the fork action or alignment may be affected.

BRAKES

If the brakes are correctly adjusted and oil is never used to lubricate the bearings, the brakes will require no attention for many thousands of miles.

Never use petrol or paraffin to wash brake shoes. These liquids have an adverse affect on the liners, and much braking efficiency may be lost thereby.

Never rasp the surfaces of brake liners with a coarse file or stiff wire brush to provide increased friction — this treatment has exactly the opposite effect.

Brake cable or rod adjustment should be such that only a slight movement of the lever or pedal is sufficient to operate the brake, but at the same time, the wheels must spin freely when the brakes are off. To give the correct adjustment, screw up the adjuster until the liners are just fouling the drum, then slack off two complete turns.

To adjust the position of the rear brake pedal in relation to the footrest, slacken the large pivot bolt with a plug spanner and holding pedal in the required position move the adjuster with a screwdriver until it is against the pedal stop. Tighten pivot bolt firmly.

After altering the tension of the rear chain, check the adjustment of the brake rod.

https://www.motomanuals.net/

REAR HUB

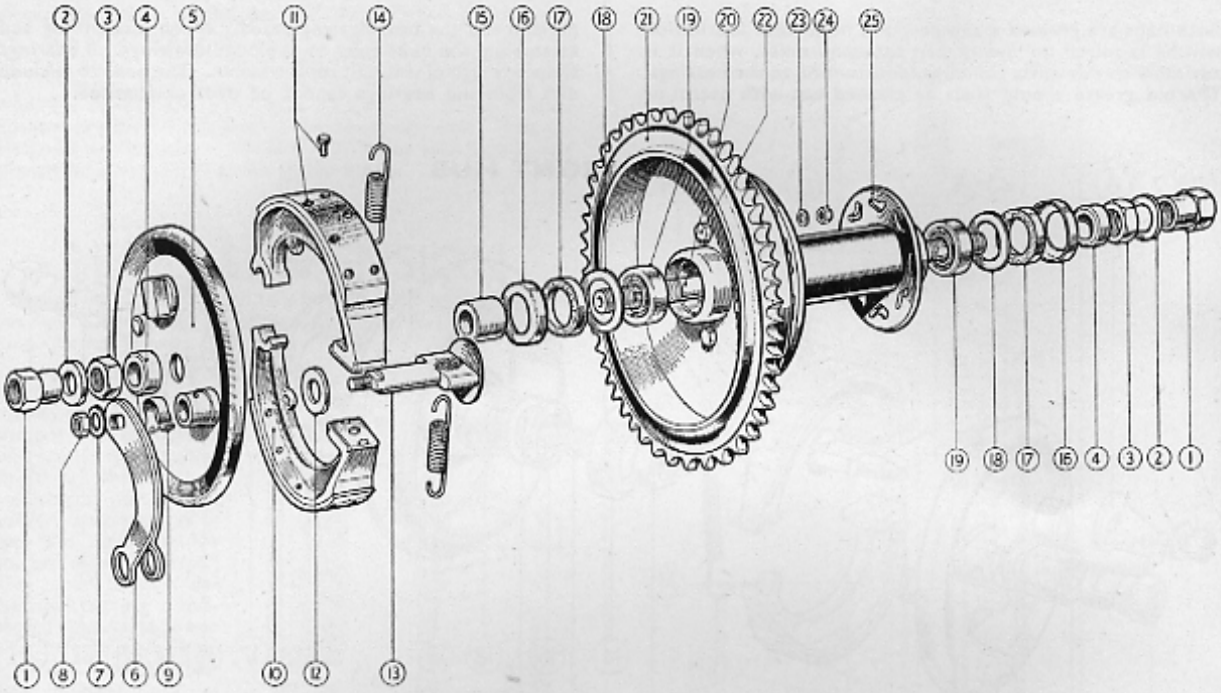

1. Spindle nut, $\frac{5}{16}$" x 26 t.p.i.
2. Plain washer, $\frac{9}{16}$" dia.
3. Locknut, $\frac{5}{16}$" x $\frac{3}{8}$".
4. Spacer, $\frac{11}{16}$" x $\frac{3}{8}$" long.
5. Brake backplate.
6. Brake cam lever.
7. Plain washer, $\frac{5}{16}$" dia.
8. Hex. nut, $\frac{5}{16}$" x 26 t.p.i.
9. Spring clip — oiler.
10. Brake shoe and lining complete.
11. Brake lining and rivets.
12. Brake cam washer.
13. Brake cam.
14. Return springs.
15. Distance piece, $\frac{9}{16}$" x $\frac{7}{8}$".
16. Bearing enclosure cup.
17. Felt washer.
18. Enclosure washer.
19. Bearing, 15" x 35" x 11 mm.
20. Rear wheel spindle.
21. Brake drum and rear sprocket.
22. Hex. bolts, high tensile, $\frac{1}{4}$" x 26.
23. Plain washer, $\frac{1}{4}$" dia.
24. Hex. nuts (self-locking).
25. Hub shell.

REAR WHEEL REMOVAL

Place machine on stand, disconnect chain, taking care not to let it trail on the ground, unscrew brake rod adjuster and speedo drive gland nut. Slacken both spindle nuts. The wheel can then be readily eased out. When replacing, make sure that back plate locking boss is engaged in its groove in the fork end. Remember also that $\frac{1}{2}$" whip should be allowed in the rear chain with rider seated. This means approx. $1\frac{1}{4}$" whip without a rider.

It is wise to always check wheel alignment after removal. The simplest way is to use a thin piece of string stretched taut across both wheels with the front wheel pointing straight ahead. The string should just touch each tyre at both sides of the wheel centre. An alternative method is to use a perfectly straight board placed alongside the wheels so that it touches each one. If necessary turn the handlebar so that the front wheel touches the board at two points. If both tyres do not make contact at two points, slacken the rear wheel spindle nuts and turn adjusters until wheel is correctly aligned.

SILENCER

To detach the silencer assembly from the exhaust pipe it is best to remove the complete exhaust unit from the machine. The exhaust pipe nut has a right-hand thread and should be tapped gently to start it. Remove the screws securing the tail pipe to the main body of the silencer and the whole internal assembly may be withdrawn.

It is advisable to clean out the exhaust pipe and silencer when decarbonising to prevent back pressure. The design is so simple and efficient that a method of cleaning will immediately suggest itself.

TOOLS

The standard tool kit supplied with new machines consists of :

1 Extra long plug spanner.
1 Open ended $\frac{9}{16}$" x $\frac{3}{8}$" spanner.
1 Open ended $\frac{3}{16}$" x $\frac{1}{4}$" spanner.
1 Open ended $\frac{7}{16}$" spanner.
1 Magneto spanner with ·015" feeler gauge.
1 Screwdriver.
2 Tyre levers.
1 Hand pump.
1 Pair pliers.

Special Tools. *(Prices available from Service Dept.)*

Villiers hammer tight spanner.
Oil gun.
Grease gun.
Rivet extractor.

Optional Equipment. *(Prices available from Service Dept.)*

Combined crashbar and legshields.
Pannier frames and bags.
Stop-light.
Windscreen.
Pillion footrests.

https://www.motomanuals.net/

TYRES

To obtain the maximum mileage from the tyres, maintenance should be regular and painstaking. Once a week check the tyre pressures with a gauge and at the same time examine the outer covers to ensure no particles of gravel, etc., are wedged in the tread. The pressure required naturally varies according to the weight carried by the tyre and the total weight is unevenly distributed between the two tyres, so that if a passenger is carried the pressure should be increased.

RECOMMENDED TYRE PRESSURES

Wheel	Solo	Pillion
FRONT ...	18 lbs.	19 lbs.
REAR	24 lbs.	27 lbs.

The following hints will also assist in prolonging the life of the tyres :

Clean oil and grease from the tyres with petrol as soon as possible.

Ensure correct alignment of the wheels.

Cross tramlines at as near a right-angle as possible. They are dangerous, particularly in wet weather and may damage the tread.

Fierce braking and acceleration quickly wear away the tread. Apply brakes gently to avoid skidding, and when starting from rest, accelerate steadily on a small throttle opening.

TYRE REMOVAL

Deflate tyre by removing cap and nut from valve stem, and unscrewing inner valve. A small key for this purpose is found on the top of the valve cover.

Push outer-cover right into wheel rim well opposite valve, and insert tyre lever under cover as near as the valve as possible. If the opposite side is properly in the well the edge of the cover should come over the rim without using force.

Work around cover until all of it is over the rim, then remove inner-tube by pushing valve up through hole and gently easing out. Remove opposite side of cover in the same way — pushing into well, inserting lever in other side and working off.

TYRE REPLACEMENT

It is seldom necessary to remove the outer-cover completely with normal punctures, but if the tyre has been taken off proceed as follows : Work one side of tyre over rim, insert inner-tube and pump up sufficiently to remove any kinks ; place valve in hole and screw the securing nut about ¼" up the shaft. The white spot on side of outer-cover should be positioned over valve.

Move free edge of cover over rim opposite valve and work round rim, equally on either side of valve until a few inches remain free. The valve should be in the centre of this free length and no difficulty should be experienced in getting it over the edge of rim providing the rest of the cover is right down in the well.

Once tyre is home, inflate to about half pressure and manipulate cover until tread runs evenly ; when rotation of the wheel has shown this to be so, inflate to correct pressure. Do not forget to replace the valve cap. This prevents the ingress of dirt.

When fitting new tyres it is a good plan to smear a little soft soap around the rim to ease the cover on.

CLEANING

Make a practice of giving the machine a really good clean as often as possible, keeping a soft cloth specially for the purpose. By careful cleaning the original sheen of enamelled parts may be retained indefinitely.

Where mud is thickly caked on, do not attempt to brush it off ; abrasive particles will rapidly damage the enamel. Water from a small hose or a wet sponge should be used, taking care not to let water into the carburetter, and brake linings.

Never garage a dripping machine after a wet run. Remove moisture by dabbing gently with a soft cloth, i.e., butter muslin.

Salt laid down in city streets during snowy winter periods has a corrosive effect on enamel and chromium plating. A useful tip is to smear the wheel rims (particularly chromed rims) and other exposed parts of the machine with a film of oil or grease. This can easily be removed with a petrol-soaked rag when the weather improves.

Tins of quick-drying lacquer in the correct James maroon shade can be purchased through most James spares stockists and will be found useful for touching-up spots where the enamel has accidentally been removed.

CHROMIUM PLATING

In damp weather, small spots of rust-like deposit may be observed on chromium plating. It is not rust but the action of certain salts used in the plating process. If attended to in good time such spots can easily be removed by rubbing with a good brand of chromium polish. NEVER USE HOUSEHOLD METAL POLISH ON CHROMIUM PLATING.

In summer, when wet conditions are less frequent, it is best to clean plating with a damp chamois leather cloth and soft rag.

ALUMINIUM ALLOY CASTINGS

A certain amount of road dirt and oil will inevitably gather on the cast alloy surfaces of the engine crankcase, primary chaincase, gearbox and carburetter, and regular cleaning will not only improve the appearance of the machine but will avoid dirt stains on trouser legs and shoes. A clean engine unit is also easier and more pleasant to maintain.

Such parts can be cleaned with a stiff brush dipped in petrol or *paraffin or, alternately, we recommend a special detergent available from most motor cycle accessory retailers, i.e., GUNK. This product is simply brushed on to the alloy parts and hosed off with water. GUNK is sold in tins and full instructions are given by the makers.

If this method of cleaning is employed care should be taken to close the carburetter cover to prevent the entry of water into the carburetter and consequent starting difficulties. Surplus water should always be wiped off with a clean rag.

*Kerosene

https://www.motomanuals.net/

SERVICE DEPARTMENT

SPARES AND REPAIRS.

For the convenience of owners, James Spares Stockists are appointed for most districts, and customers are recommended to always apply to their nearest stockist. A list of stockists can be obtained on application (please enclose stamped and addressed envelope for reply).

When ordering spare parts, owners are advised to produce the original part as pattern, and to quote their full engine and frame numbers to enable identification.

Instructions regarding repairs should be clear and definite, otherwise the cost may be greater than expected. We shall be pleased to give estimates for repairs if parts are sent to us for that purpose. If the estimate is accepted, no charge will be made for the preliminary examination, but should the owner decide not to have the work carried out, a nominal charge may be made to cover the cost of whatever work may have been done to prepare the estimate. Parts sent to us as patterns or for repairs, should have attached to them a label with the sender's full name and address. Instructions regarding such parts should be sent separately.

Customers wishing to retain old parts which are replaced during overhaul or repair should state so before work commences, as normally such parts are scrapped upon removal.

If it is necessary to bring a machine, or parts, to the works for an urgent repair, it is essential that an appointment be made beforehand. This can be done by letter or telephone, and will avoid disappointment.

Orders should always be sent in list form and not as part of a letter.

For the benefit of owners visiting the Factory Service Department we give below a straightforward map indicating our exact position and Corporation 'bus services to and from City centre.

HOURS OF BUSINESS FOR CALLERS:

8.30 a.m. to 12.30 p.m.

1.30 p.m. to 5.30 p.m.

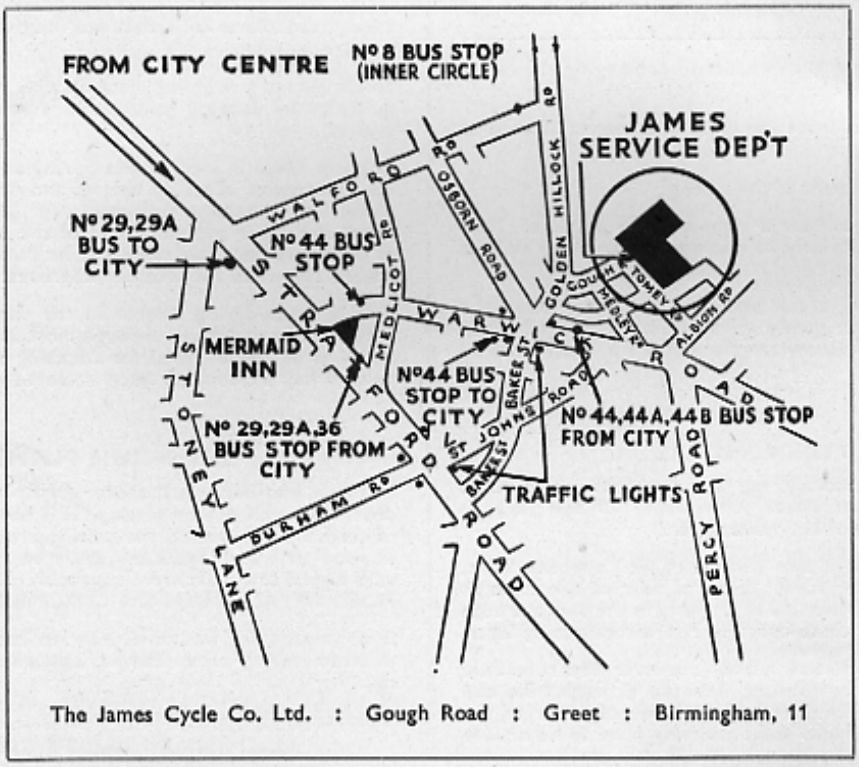

The James Cycle Co. Ltd. : Gough Road : Greet : Birmingham, 11

OPEN FROM MONDAY TO FRIDAY

(Not Open on National Holidays)

ROTARY EXCHANGE SERVICE.

As a result of fair wear and tear, it is inevitable that certain parts will eventually require special attention and owners of JAMES machines will save both time and expense by taking advantage of the exchange service available for the replacement of major parts and units. Reconditioned components supplied under this scheme carry a full six months guarantee. Prices are available from our Service Department.

Parts to be exchanged under the Rotary Exchange Service should be handed to an official JAMES dealer or sent direct to the factory with appropriate instructions. We reserve the right to refuse badly damaged parts which cannot be satisfactorily reconditioned.

FORKS. Special equipment is used to fit and line reamer the "Tufnol" bearings in the outer fork tubes and for this reason bearings are normally only supplied to overseas customers. The fork "H" assembly only should be returned to the works for replacement. If the complete forks are returned, an extra charge will be made for dismantling and re-assembling.

REAR SUSPENSION UNITS. Special jigs are used for assembling and stripping the units and should replacements prove necessary, the worn units should be returned complete.

BRAKE SHOES AND LININGS. Although replacement linings and rivets can be supplied, it is preferable to return the complete brake shoe and worn liner for replacement.

CYLINDER. The importance of accurate reboring cannot be over-emphasised and exchange cylinders rebored by our Service Department are ground to standard oversize limits and fitted with new oversize piston and rings.

CLUTCH PLATES. If the plates are not warped or otherwise damaged, they can be exchanged for reconditioned plates with accurately ground new cork inserts.

https://www.motomanuals.net/

THE ENGINE

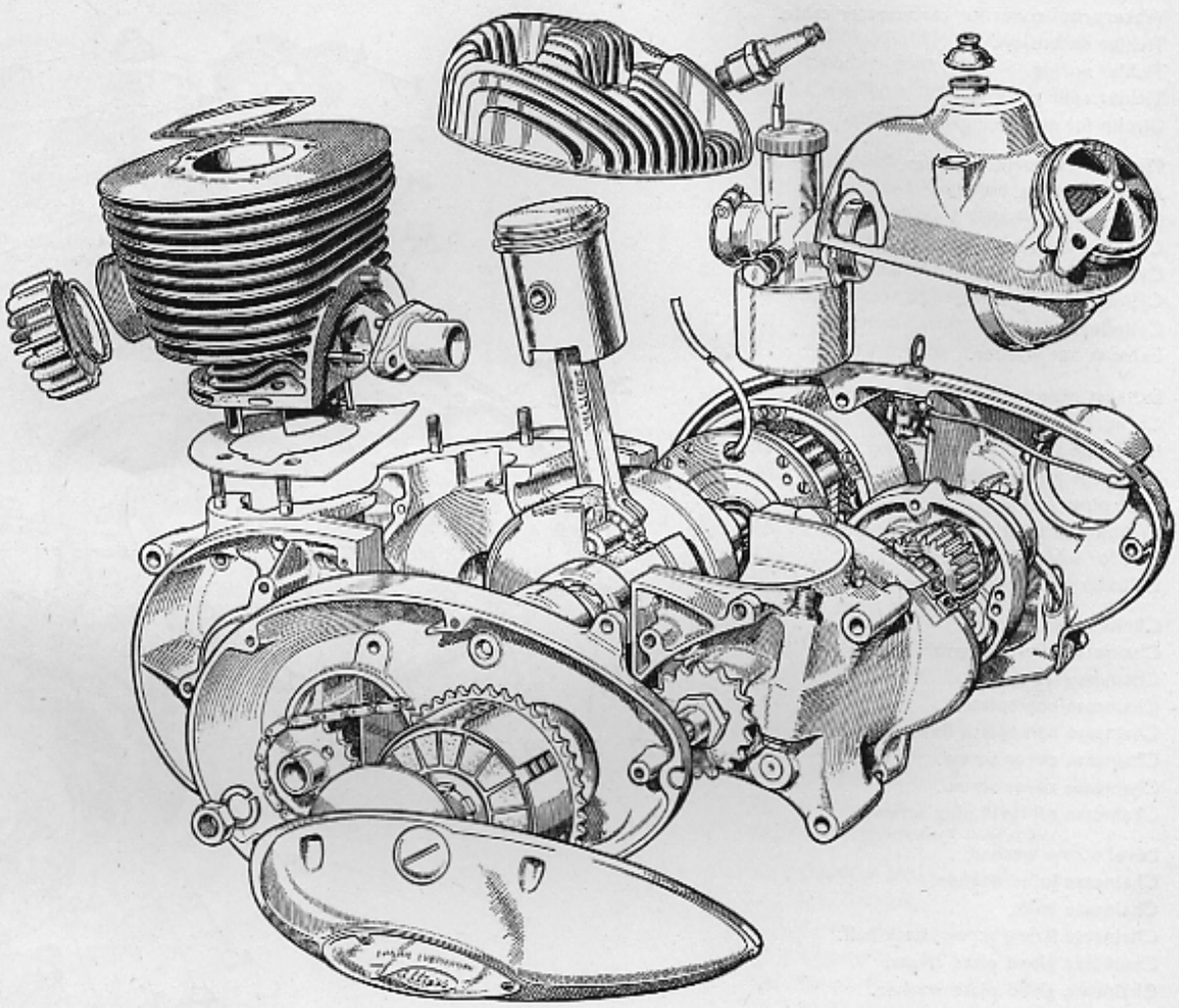

The Villiers Mk. 1H unit has been designed as a smooth medium power engine for touring at moderate cruising speeds, and not as a high performance sports motor. The main features of this engine are illustrated above.

The detachable, heavily finned aluminium alloy cylinder head has a hemispherical combustion chamber with sparking plug towards the rear and a compression ratio of 7 to 1. The head is secured to the cylinder by 4 bolts and a washer ensures a good joint.

The cast iron cylinder has 63 m.m. x 72 m.m. bore and stroke dimensions and is spiggotted into the aluminium alloy crankcase which is cast in halves. In the cylinder walls are arranged four holes or ports, viz : one inlet port which permits the air fuel mixture to enter the crankcase, two transfer ports which, through passages in the sides of the cylinder, are in communication with the crankcase, and one exhaust port through which the burned charge is allowed to escape. Movement of the piston in a vertical direction is arranged to cover and uncover the ports at suitable times so that the mixture is first drawn from the carburetter through the inlet port into the crankcase. There it is compressed and then forced through the transfer passage into the cylinder above the piston, where it is further compressed. It is then ignited by a spark from the plug, and after expansion due to heat, escapes through the exhaust port into the exhaust pipe and silencer.

While the actual crankcase is necessarily of small volume, the structure accommodates a crankshaft assembly nearly a foot long, supported on both sides of the flywheels by two well spaced $2\frac{3}{8}$" ball bearings, which ensure great rigidity and consequent smooth running. On the drive side, the outer of the two bearings is pressed in against the crankcase wall ; the armature plate, dowelled and screwed to the opposite side of the crankcase, acts as a mounting for ignition and lighting coils, and also locates the outer bearing. Oil seals are fitted at the crankcase extremities.

The steel flywheel webs have machined recesses for balance and carry side plates and the hardened polished crankpin is an interference fit in the webs, further secured by expander plugs. — *continued on page 16.*

https://www.motomanuals.net/

ENGINE AND CO

1. Air shutter fixing screws.
2. Air shutter plate and cover.
3. Carburetter cover.
4. Waterproof cover for carburetter cable.
5. Tickler extension.
—. Tickler spring.
—. Tickler split pin.
6. Circlip for air filter gauze.
7. Plate for carburetter cover.
8. Air filter gauze.
9. Cylinder head bolt
10. Cylinder head bolt washer.
11. Cylinder head.
12. Cylinder head gasket.
13. Cylinder.
14. Exhaust nut washer.
15. Exhaust pipe nut.
16. Carburetter cover dowel.
17. Inlet pipe studs.
18. Inlet pipe joint washer.
19. Inlet pipe
20. Washer for inlet pipe studs.
21. Nut for inlet pipe studs.
22. Cylinder base joint washer.
23. Chaincase filler cap.
24. Chaincase filler cap washer.
25. Chaincase front.
—. Chaincase nameplate.
—. Chaincase nameplate fixing screw.
26. Chaincase cover screw.
—. Chaincase cover screw.
27. Chaincase oil level plug screw.
28. Level screw washer.
29. Chaincase joint washer.
30. Chaincase back.
—. Chaincase fixing screw, back half.
31. Chaincase gland plate rivets.
32. Chaincase gland plate washer.
33. Chaincase gland plate.
34. Chaincase fixing stud nut.
35. Spring washer for stud.
36. Plain washer for stud.
37. Chaincase fixing stud.
38. Gearbox body.
39. Carburetter cover screw.
40. Dipstick complete.
41. Gearbox filler plug washer.
42. Gearbox joint washer.
43. Gearbox dowel.
44. Gearbox drain plug washer.
45. Gearbox drain plug.
46. Gearbox end plate joint washer.
47. Gearbox end cover screw, medium.
48. Gearbox end cover screw, short.
49. Gearbox end cover screw, long.
50. Gearbox fixing stud.
51. Gearbox fixing stud washer.

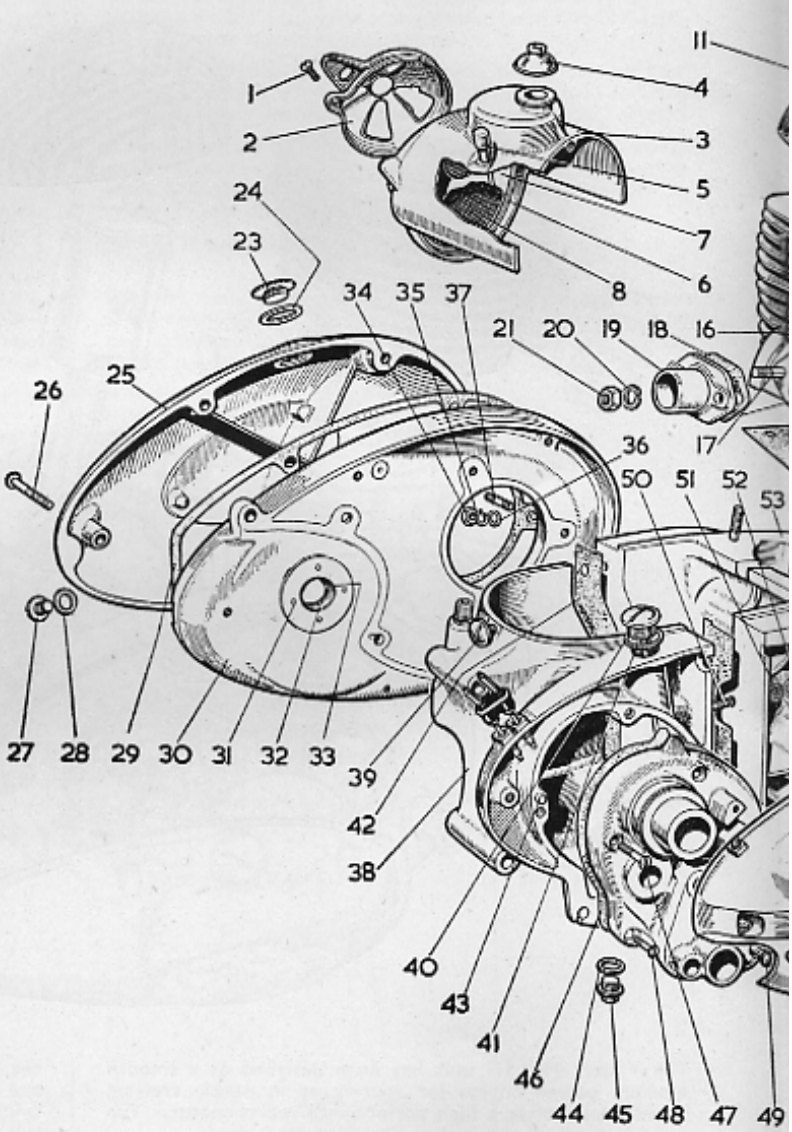

—continued from page 15

The forged I-section connecting rod has a double row of $\frac{1}{4}" \times \frac{1}{4}"$ roller bearings forming the big end and a bronze backed steel sleeve at the small end. The piston is of the flat top pattern with two compression rings and bronze bushed gudgeon-pin bosses.

Bulbous, die-cast crankcase extensions on either side of the unit enclose the A.C. generator on the right-hand side and primary transmission on left-hand side. The casting on the generator side is recessed to house the contact breaker mechanism and condenser. A detachable cover plate provides access for contact breaker adjustments. The crankcase extensions are profiled rearwards to blend with the gearbox shell and enclose the clutch. The gearbox is a separate unit bolted to the back of the crankcase.

REMOVING THE POWER UNIT

When more than superficial adjustments to the engine are called for, the owner will wish to remove the engine assembly completely from the frame

https://www.motomanuals.net/

ONTACT BREAKER

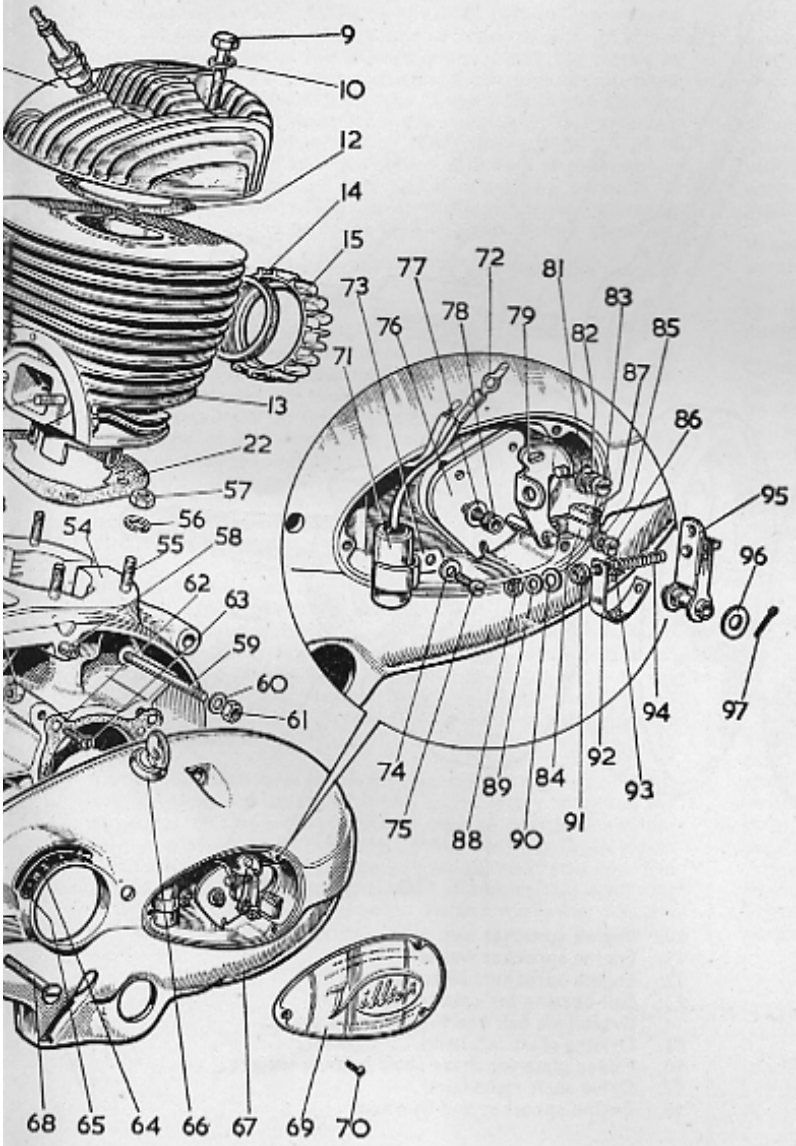

so that it can be dealt with more conveniently and certainly with greater comfort at workbench height. As will be seen from the general assembly drawing dismantling is more or less self explanatory, although advice may be useful.

PETROL TANK. The removal of this is effected by first detaching the plastic petrol pipe by pulling off the fuel tap. There then only remains to be removed the two bolts attaching the tank to the frame.

SPEEDOMETER DRIVE. Lead from the end of the gearbox layshaft, this is to be found in a position just behind and to the left hand side of the carburetter strangler. If the hexagon nut is unscrewed, the cable can be withdrawn and it will be seen that the end registers with a slot forming the drive.

ENGINE. First disconnect rear chain, clutch and throttle cables and ignition leads. Now have a box or similar object placed under the engine ready to support it as the frame fixing bolts are withdrawn.

52. Gearbox fixing stud nut.
53. Crankcase, left-hand.
54. Crankcase, right-hand.
—. Crankcase drain screw.
—. Crankcase drain screw washer.
55. Cylinder base stud.
56. Cylinder base stud washer.
57. Cylinder base stud nut.

58. Right-hand cranckase dowel.
59. Crankcase fixing stud.
60. Crankcase fixing stud washer.
61. Crankcase fixing stud nut.
—. Crankcase fitting stud.
—. Crankcase fitting stud washer.
—. Crankcase fitting stud nut.
62. Armature plate joint washer.

63. Armature plate fixing screw.
64. Plate for gear indicator.
65. Fixing screw for plate.
66. Ignition switch complete.
67. Magneto cover.
68. Magneto cover screw.

CONTACT BREAKER

69. Contact breaker cover.
70. Contact breaker cover fixing screw.
71. Condenser.
72. Condenser lead screw.
73. Condenser clip.
74. Condenser clip screw washer.
75. Condenser clip screw.
76. Contact breaker base plate.

—. Cam for contact breaker.
—. Key for cam.
—. Circlip for ignition cam.
77. Washer for contact breaker base plate screw.
78. Screw for contact breaker base plate screw.
79. Point bracket.
80. Rocker Pivot Pin.
81. Point bracket lock screw washer.

82. Adjusting plate clamp screw washer.
83. Point bracket screw.
84. Oil pad clip.
85. Washer for oil pad clip screw.
86. Screw for oil pad clip screw.
87. Oil pad.
88. L.T. terminal nut.
89. L.T. terminal washer.

90. L.T. terminal screw washer.
91. L.T. terminal bush.
92. Rocker arm earthing strip.
93. Point bracket pin.
94. Rocker arm spring.
95. Rocker arm.
96. Washer for rocker arm pivot pin.
97. Split pin for rocker arm pivot pin.

https://www.motomanuals.net/

CRANKSHAFT ASSEMBLY

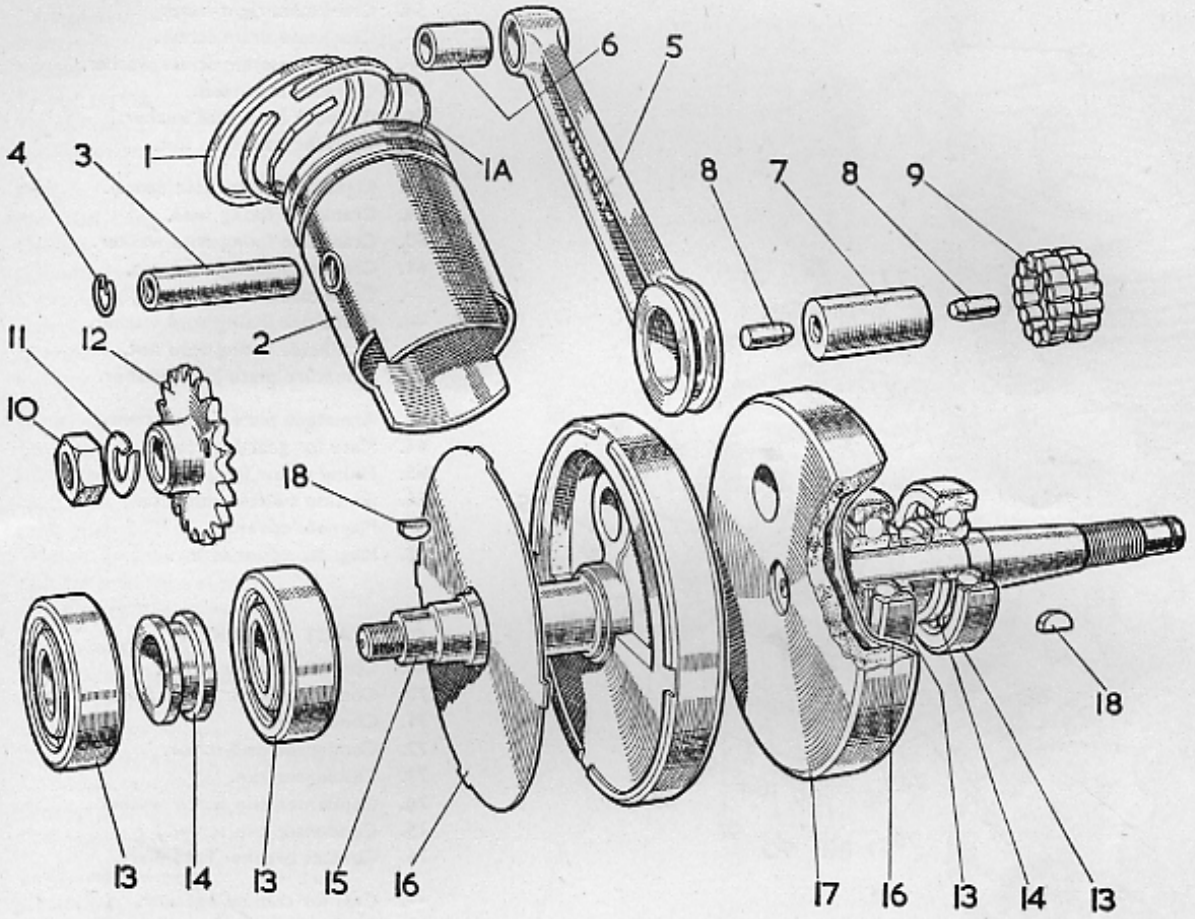

1. Piston rings.
1A. Expander ring.
2. Piston with bushes.
3. Gudgeon pin.
4. Gudgeon pin circlips.
5. Connecting rod with bush.
6. Connecting rod bush.
7. Crankpin.
8. Crankpin plugs.
9. Rollers for crankpin.
10. Engine sprocket nut.
11. Engine sprocket washer.
12. Engine sprocket, 20 teeth.
13. Ball bearing for crankshaft.
14. Driveshaft ball bearing, distance piece.
15. Driving shaft left-hand.
16. Cover plate for drive shaft balance weight.
17. Drive shaft right-hand.
18. Engine sprocket and flywheel.

DECARBONISING

The points at which carbon forms most rapidly are the combustion chamber, piston head, exhaust port and silencer. It will be appreciated that excessive carbon in the combustion chamber will reduce compression space and probably cause pre-ignition and rough running. Heavy carbon deposits in the exhaust pipe and silencer will cause back pressure coupled with heavy fuel consumption, loss of power and overheating.

We do not specify any particular mileage at which to carry out the task of decarbonisation as the rate at which carbon forms is largely dependant upon the way the rider treats his machine and also the type of riding it is used for. Carbon tends to form more quickly if a machine is used for short journeys than on long runs, when the engine becomes really warm and will blow out most of the carbon. Hence, while one machine may require attention at 2,000 miles another might have accumulated only a slight deposit at 5,000 miles. Irrespective of mileage, it will be time to decarbonise when excessive pinking is heard.

When preparing to decarbonise, disconnect the petrol pipe and remove fuel tank. Take off carburetter cover, disconnect throttle control cable by unscrewing top of carburetter. Remove carburetter and sparking plug. Unscrew the four cylinder head fixing bolts. The bolts unscrew in an anti-clockwise direction. The head can now be lifted clear of the cylinder, and although the gasket fitted between the cylinder head and cylinder barrel may not be damaged, it is advisable to replace this when re-assembling.

https://www.motomanuals.net/

With a soft copper scraper, remove all deposit from the inside of the head, taking care not to damage the joint faces With the piston at the top of the stroke, remove all carbon from the piston top. Wipe off any loose carbon from around the edge of the piston, then unscrew the exhaust pipe nut and remove silencer and exhaust pipe. Move the piston to the bottom of its stroke and scrape out any carbon from exhaust stub and from the edges of the port in the cylinder bore. This is best done from the outside of the cylinder, taking care to avoid scratching the cylinder bore. A piece of soft cloth placed in cylinder bore will help to prevent the scraper causing damage and also prevent any particles of loose carbon from falling down through transfer passages. Make sure there is no loose carbon about before assembly.

Remove any accumulation of mud or grit from the cylinder fins.

If it is necessary at any time to remove the cylinder, the four nuts and spring washers fitted to the studs securing the cylinder to the crankcase must be removed. Following this, the cylinder may be taken off, but it is important not to twist the cylinder in relation to the piston, otherwise there is a danger of the ends of the piston rings springing into the ports and consequent breakage.

To remove the piston from the connecting rod a pair of thin nosed pliers should be used to take out one of the spring circlips which retain the gudgeon pin in position. When this has been done, the gudgeon pin can be pushed clear of the small end bush and the piston lifted away. If carbon deposits prevent removal by hand, the use of an extractor of the band type is recommended, although it may be effected by tapping gently with a mallet. In that case, be sure to support the piston to avoid any strain being placed upon the connecting rod. Lift piston away and mark the inside of the skirt to enable it to be re-fitted in the same position relative to the cylinder.

Carbon will also form in the grooves behind the piston rings, and to remove this deposit it will be necessary to spring the rings out of the grooves. Rings may be removed without risk of damage by introducing behind the ring three pieces of thin brass strip equally spaced around the piston and then sliding off the rings. It is desirable to ensure that each ring is re-fitted in its original groove. Behind the lower ring will be found an expander ring. This ring is fitted to prevent noise due to " piston slap " whilst the engine is cold. This ring will have to be cleared of carbon and will, in time probably lose its " temper " because of the heat and, therefore, it is advisable to renew the expander ring when decarbonising. The piston rings should be bright all round and for the whole width indicating that the whole of the piston ring area is in contact with the cylinder bore. If the gap between the ends of the rings when in the cylinder, exceeds ·030", then they should be discarded and replaced. The amount of gap can be checked by placing the ring inside the cylinder bore and pushing in a little way with the skirt of the piston. This ensures that the ring is square to the bore, and the gap can then be checked by feeler gauges.

Where new rings of the standard size are required it is necessary to check the gap before fitting to the piston. Place the ring square inside the cylinder bore when the gap between the ends of the ring should have a maximum of ·011" and a minimum gap of ·007".

Quite often we are asked in the case of the cylinder showing just a little wear, whether ·015" oversize piston rings can be filed down to compensate this wear. This is a totally impracticable solution, with the bore at nominal size, nominal size rings must be fitted. Similarly with a bore ·015" oversize ·015" o/s rings also must be fitted.

When the engine has covered a considerable mileage the cylinder bore will obviously wear and, therefore, before fitting the cylinder the bore should be checked for size. Wear will be greatest at the top of the ring travel and will gradually diminish to the bottom. The measurement must, therefore, be taken from the top. If the bore is ·008" or more larger at the top than at the bottom, the cylinder should be returned to the works for reboring and the fitting of an oversize piston with rings. For this purpose a rotary exchange service is available ; price upon application.

When refitting the cylinder, fit new base washer to crankcase. Smear cylinder bore and piston surfaces with engine oil and fit cylinder barrel over piston, taking every care not to twist the cylinder. Ensure each piston ring is fully compressed in its groove with the ends correctly fitting on the locating pegs as the barrel passes over it. Replace the four nuts on cylinder base studs and tighten equally until they are fully tight. Re-fit cylinder head with new gasket in position. Tighten the four bolts in diagonal rotation to prevent any possibility of cylinder head distortion.

CHAINCASE AND GEARBOX LUBRICATION POINTS

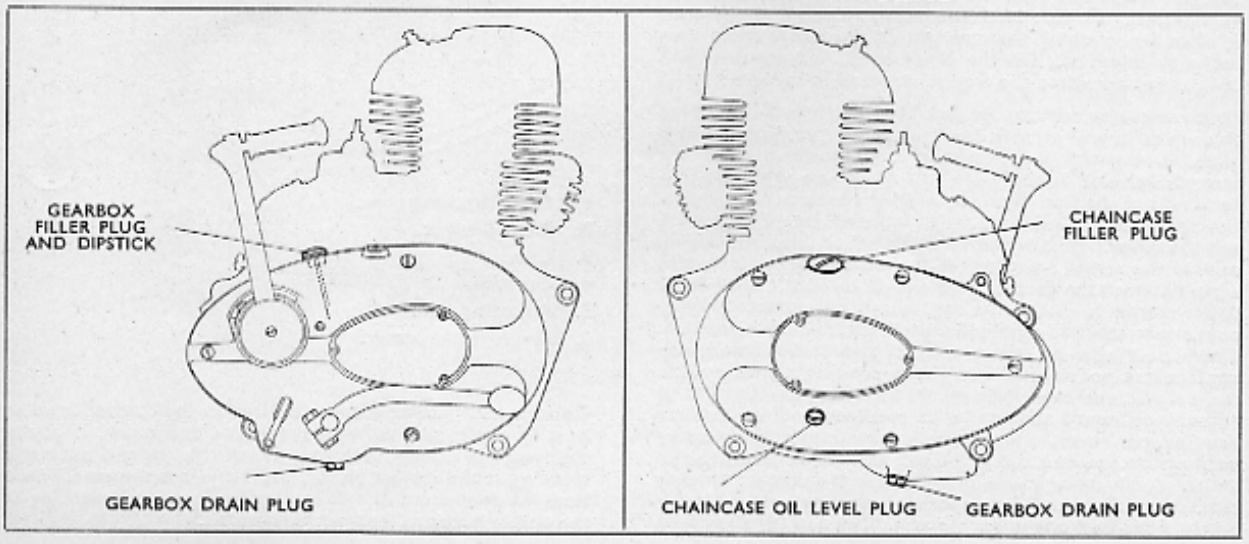

https://www.motomanuals.net/

IGNITION AND LIGHTING

A.C. Generator. The purpose of the generator is to produce a hot spark across the points of the sparking plug and to generate current for the lighting equipment. On the K12 Colonel, the generator consists of six permanent magnets secured to a rotating flywheel and a stator plate on which are mounted the low tension and lighting coils. (See illustration.) The flywheel carrying the magnets is keyed on to the tapered engine mainshaft and is retained by a flanged extractor nut.

If the need arises to remove this, first take away the contact breaker cam which is also keyed to the shaft and retained by a circlip. With these taken away the flywheel can be removed with the use of the special hammer-tight spanner. It is merely a question of loosening the outer nut by means of its right-hand thread.

The coils mounted on the stator plate (2) are paired and connected in parallel ; the output of the two Low Tension ignition coils (4) going to the High Tension coil fitted inside the toolbox, and the two Lighting Coils to the switch and rectifier for conversion to D.C. for battery charging purposes. Another connection from the first two coils (4) goes straight to the rectifier resulting in L.T. voltage excessive to that required for H.T. induction (approx. 6–7v.) by passing the ignition coils and supplementing the flow of current to rectifier and battery.

The armature plate is retained by four countersunk headed screws and at the back of the plate there is a paper washer which should always be renewed each time the magneto is re-assembled.

(1) Coil cheek screws.
(2) Armature plate.
(3) Lighting coils.
(4) L.T. ignition coils.
(5) Pole screws.
(6) Pole shoe top plate.
(7) Flywheel rotor with permanent magnets.

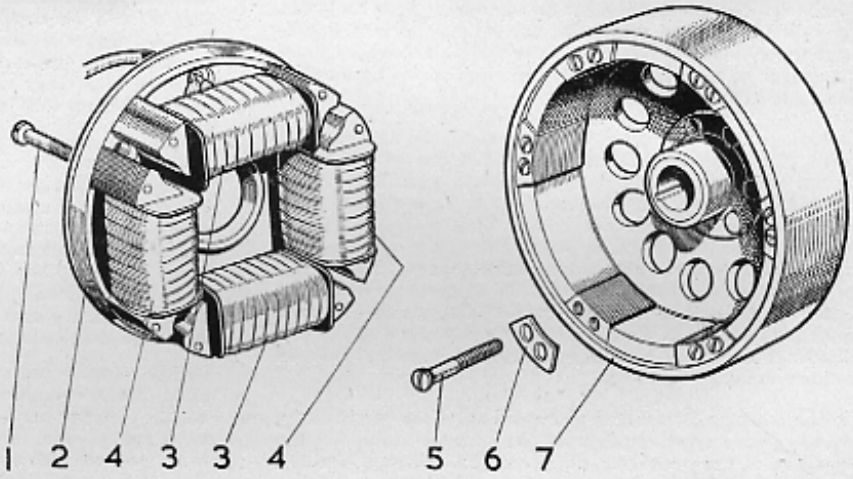

Contact Breaker. Access to this component for point adjustment is gained by removing the die cast JAMES name-plate on the right-hand side of the engine. When the unit is originally assembled at the works, the base plate on which the rocker arm is pivoted is secured and locked by the screw 6. The base plate is set so that the contact points commence to open when the piston is 5/32" before top dead centre. WARNING. Do not interfere indiscriminately with screw 6, since by so doing the strength of the spark could very easily be impaired. On the other hand, if a genuine need does arise to re-time the engine, proceed as follows :

First remove solder from socket headed screw 6 and loosen this which it will be seen secures the contact breaker base plate. Swing the plate to an average position when the screwdriver slot in the plate will be in line with the left-hand side of the slot (5) in the magneto cover. The original timing position is indicated by an indented line on the plate and the cover. Then with the piston set at top dead centre, release the screw 1 and adjust the point bracket 2 to give a gap between the contact points of ·012"–·015". Afterwards tighten screw 1. Rotate the engine until the contact breaker points commence to open and then check the piston position. This should now be between 5/32" and 11/64" before top dead centre position. If the piston position comes outside these limits, the base plate should be swung left or right to advance or retard the timing as required and the contact breaker gap re-set. Repeat both adjustments if necessary until piston position and point gap are within the requisite limits. A felt oiling pad is provided for the contact breaker cam, this makes for silent operation and reduces the wear on the fibre heel of the rocker arm. The pad (4) should be removed periodically and soaked in a high melting point grease.

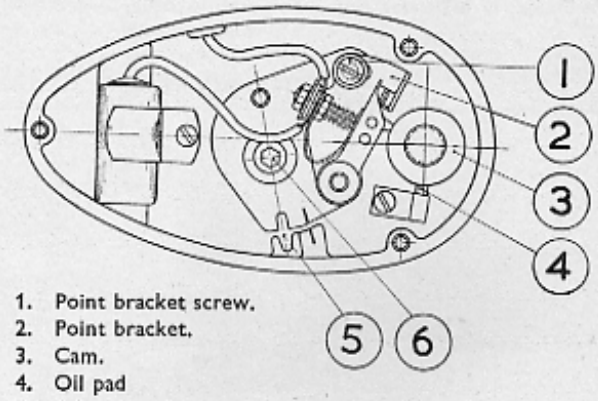

1. Point bracket screw.
2. Point bracket.
3. Cam.
4. Oil pad
5. Adjusting slot.
6. Timing plate screw.

Condenser. The condenser is fitted in the contact breaker housing and is retained by a simple clip and screw. A faulty condenser is usually indicated by continuous and excessive sparking at the contact points, but if failure is suspected make sure the condenser is well earthed. Occasional sparking of the points is normal and can be ignored.

https://www.motomanuals.net/

High Tension Coil. This coil is protected by a moulded cover and is fitted within the toolbox. It has several internal connections and owners are advised not to tamper with it. It can, however, be removed as a unit if failure is suspected and can be tested by your motor-cycle dealer. Neither the coil or the case can be supplied separately.

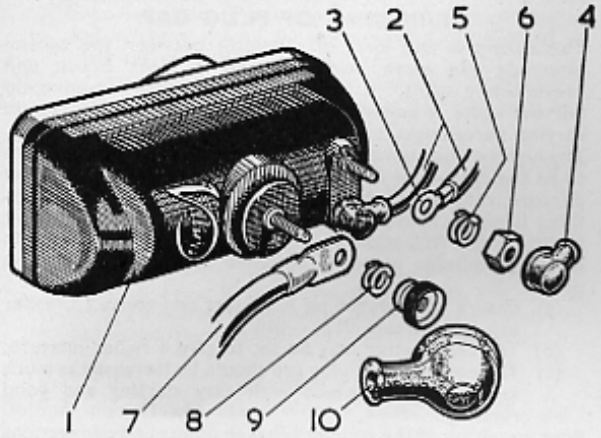

(1) H.T. coil and case.
(2) L.T. lighting leads.
(3) Clip on terminal.
(4) Rubber cover.
(5) Spring washer.
(6) Hexagon nut.
(7) H.T. lead.
(8) Spring washer.
(9) Terminal screw.
(10) H.T. lead terminal cover.

Ignition Switch. The on/off ignition switch operated by a Yale type key on the R.H. crankcase cover is designed as a thief proof device which enables the owner to earth the primary circuit to prevent the machine being started when left unattended and it should not be mistaken for a battery switch. This is shown in the accompanying drawing which also illustrates the crankcase casting with recessed compartment for contact breaker and condenser components.

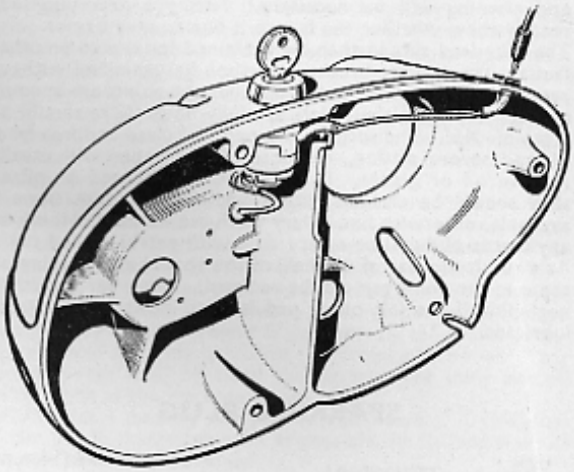

IGNITION AND LIGHTING WIRING DIAGRAM

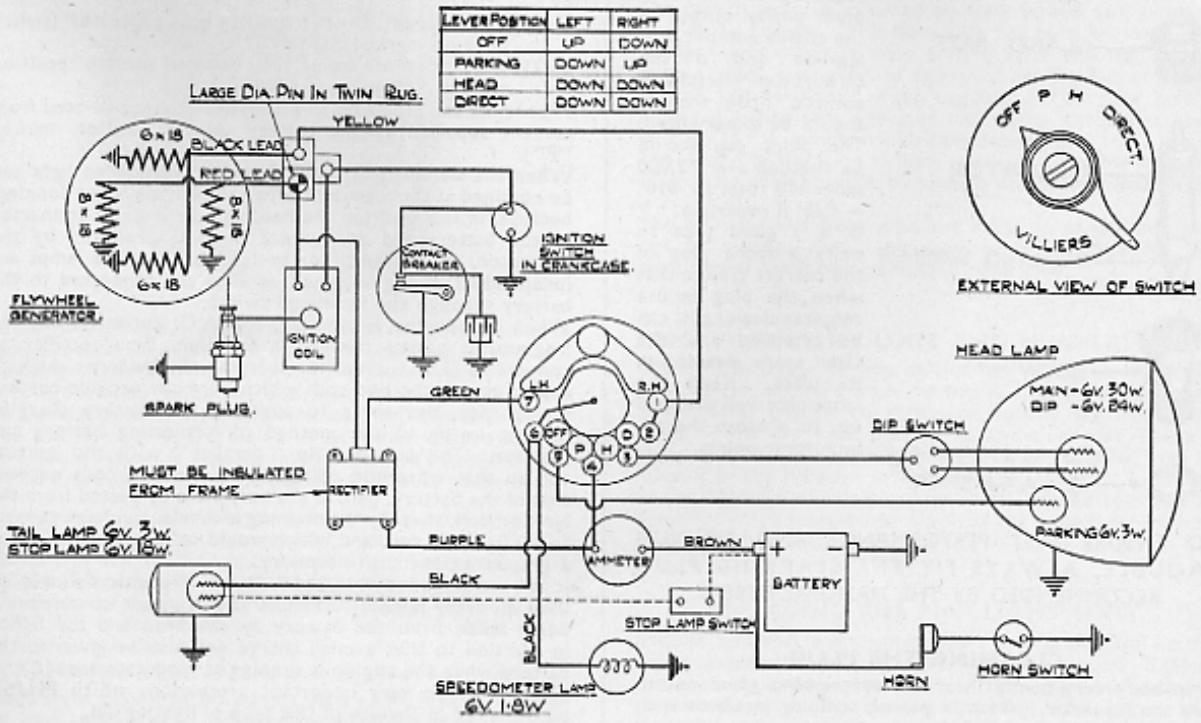

REPLACEMENT BULBS.

Headlamp	6 volt–30/24 watt. Twin-filament pre-focus type.	Tail lamp	6 volt–3 watt. S.B.C.
Parking (pilot lamp) ...	6 volt–3 watt. M.B.C.	Tail-Stop light (if fitted)	6 volt–18 watt. Twin-filament.
		Speedo light	6 volt–1·8 watt. M.B.C.

https://www.motomanuals.net/

Ignition Failure. Serious trouble in the form of condenser breakdown is very rare and any ignition failure will generally be due to the condition of the sparking plug or contact breaker points, or faulty insulation of the H.T.lead or other connections.

The first step in dealing with ignition trouble should be to remove plug from engine and examine the points to see whether they are oily and the gap correctly set between ·018" and ·025". If the insulator is fouled with oil and carbon, there may be sufficient leakage to prevent correct sparking and cleaning will be necessary. Fitting a new plug will readily show whether the failure is due to plug or not.

The plug lead should then be examined for cracks or other faults. The contact breaker can then be examined without removing the flywheel to see whether the points are opening correctly. When the points are fully open there should be a gap of ·015". The surfaces must also be clean and free from oil and severe pitting. A piece of stiff paper will usually remove oil or grease. If the points are burned or pitted they should be cleaned with a fine carborundum stone if available, otherwise fine emery cloth can be used, wiping off any traces of metal or emery dust with petrol-soaked rag.

As a result of wear of the heel of the rocker arm bearing on the cam the point gap will be reduced. This wear should be negligible if the felt oiling pad is kept moist with suitable lubricant.

SPARKING PLUG

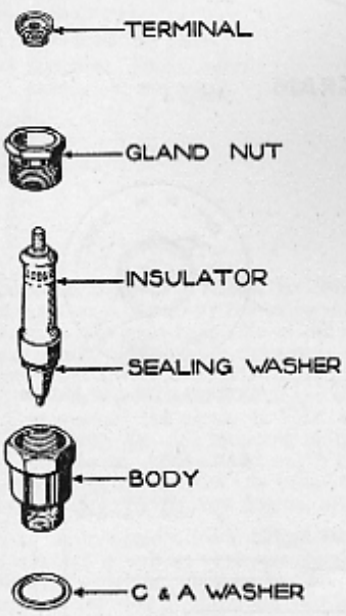

A Lodge HH14 (14 m.m. short reach) plug is fitted as original equipment. This plug will stand up to the maximum power output of the engine without pre-ignition and if the carburetter mixture is correct, little trouble should be experienced. The point gap should be checked every 2,000 miles and reset to ·018" —·025" if necessary.

It is a good plan to carry a spare plug of the correct type so that when the plug in use requires cleaning, it can be removed and the clean spare inserted in its place. Keep the spare plug well wrapped up, to protect the all-important points.

TO ENSURE BEST PERFORMANCE AND MINIMUM TROUBLE, ALWAYS FIT THE SPARKING PLUG RECOMMENDED BY THE MANUFACTURERS.

CLEANING THE PLUG

Grip body very gently in a vice and remove gland nut to free the insulator. Wash in petrol, scraping insulator with a knife or rubbing with fine emery to remove carbon, and wash again. The body can be cleaned internally by scraping and wiped with a petrol-soaked rag. The electrodes should be very carefully scraped. DO NOT rub a wire brush over the points — this will have a ruinous effect. When re-assembling tighten gland nut as much as possible.

Set point gaps to ·018"—·025" by tapping OUTSIDE electrodes — NEVER attempt to bend the central electrode.

Do not over-tighten the plug in the cylinder head ; this may result in stripped threads and flattening of the copper washer.

A whitish deposit on the insulator denotes a weak carburetter mixture.

BRIDGING OF PLUG GAP

This occurs in the form of a deposit between the central electrode and earth points, causing a short circuit and preventing a spark. It is sometimes mistaken for oiling-up but the cause is believed to be the residue of detergent in varying percentages in oil.

The high working temperature of a two-stroke engine appears to be the reason for this bridging and it follows that a weak mixture, retarded ignition, a choked exhaust system or anything likely to increase the working temperature may result in bridging. Attention to the following will result in an increased mileage before it becomes necessary to clear the points.

(a) Ensure ignition timing is correct and contact breaker gap is between ·012"—·015".
(b) The carburetter may be set to give a richer mixture.
(c) The normal spark plug gap should be increased as much as possible consistent with easy starting and good running.

Poor condition of the contact breaker points and connections may also lead to failure.

LIGHTING EQUIPMENT.

The lighting set fitted to the James Colonel is an AC/DC system which enables the rider to be completely independent of the state of charge of the battery for night riding. The headlamp main bulb and tail light may be illuminated either by :—

(1) A.C. current direct from flywheel generator (switch position marked "DIRECT").
(2) D.C. current from the battery (switch position marked "H").

Pilot lights and stoplamp (if fitted) are always operated from current supplied by the battery (switch position marked "P").

When the switch is in the " Direct " position no light can be obtained at the main bulb when the engine is not running, because, in this position the headlamp bulb is not connected to the battery and no current is being produced by the generator. In all the other switch positions the lamps are independent of engine speed, as they are connected to the battery through the headlamp switch.

When the engine is running, the A.C. current from the magneto is passed through a Selenium type rectifier to convert to D.C. current for charging the battery. At high engine speeds the two coils which normally provide current for ignition also serve to augment the battery charging current owing to the method of connecting battery and rectifier. The circuit is in " parallel " with the ignition coil so that when the voltage from the two coils exceeds that of the battery, part of the current is by-passed from the ignition coil, thereby maintaining a constant voltage control to the ignition coil, and which would otherwise build up to a greater extent than necessary.

It is recommended that the " Direct " position should be used on every possible occasion, as this means no current is being taken from the battery by the head and tail lights. In addition to this, a small charge will also be given to the battery when the engine is running at moderate speeds.

There are two very important precautions which **MUST** be observed in the use of this type of lighting set.

(1) **THE RECTIFIER CASING MUST BE COMPLETELY INSULATED FROM THE FRAME.** The essential is that there should be no direct metallic connection between the casing of the rectifier and any part of the motor cycle.

https://www.motomanuals.net/

The Selenium type rectifier is fitted to the back of the battery container and is thus sandwiched out of harm's way between toolbox and battery box. To gain access to the rectifier, it is advisable to remove the toolbox on right hand side of machine. The rectifier itself is secured to the battery container by four bolts and if the rectifier is removed it is most important that the insulating fibre distance pieces and washers should be undamaged and replaced in their correct position.

ALWAYS REFER TO THE WIRING DIAGRAM WHEN CHECKING CONNECTIONS OR REPLACING CABLES.

(2) **THE MACHINE SHOULD NOT BE USED WITH THE BATTERY DISCONNECTED EXCEPT IN AN EMERGENCY.** Maximum road speed should then not exceed 35 m.p.h. in top gear. The battery when in the circuit controls the maximum voltage from the magneto coils and pre-ignition is likely to occur at high speeds owing to the rise in voltage if battery is disconnected. It is unnecessary to disconnect the rectifier when battery is removed.

BATTERY.

Colonel models are fitted with a Lucas "dry charged" battery—Lucas type PUZ7E-9, capacity 6 volt, 12 amp. hours —housed in a container on Left-hand side of machine.

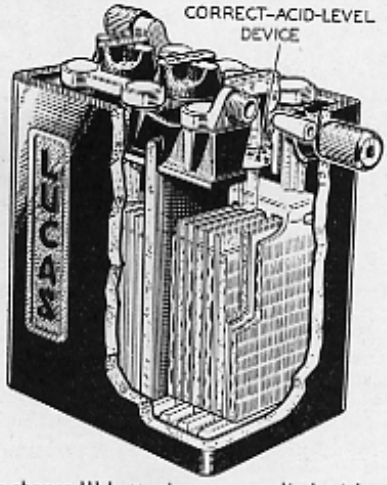

Lucas "Dry charged" batteries are supplied without electrolyte, but with their plates in a charged condition. No initial charging is required and to bring the battery into service it is only necessary to fill the cells with electrolyte, prepared by mixing concentrated sulphuric acid and distilled water. The cell filler holes are sealed to exclude moisture and air before the battery is brought into service and the seals should be removed immediately before electrolyte is poured in.

Preparation of Electrolyte : In the U.K. and countries where temperatures are normally below 90°F. (32°C.) electrolyte of 1·270 S.G. is required, viz : 1 part acid (1·835 S.G.) to 2·8 parts distilled water. In tropical climates where temperatures frequently rise above 90°F., electrolyte of 1·210 S.G. is recommended, viz : 1 part acid (1·835 S.G.) to 4 parts distilled water.

WARNING—*Always add acid to water*—**Not water to acid.**

Electrolyte should be mixed in a glass or earthenware vessel or lead lined tank. Temperature of filling room, battery and electrolyte should be maintained at between 60°F. and 100°F.

Batteries filled in this way are 90% charged. After filling, a dry charged battery needs only the attention normally given to lead-acid type batteries.

BATTERY MAINTENANCE.

It will be noted that directions are expressed in terms of TIME instead of MILEAGE as is usually the case with motor cycles.

This is because deterioration soon sets in if the battery is left standing without attention for any length of time. To keep the battery in good condition, maintenance must be carried out whether the machine is in use or not.

Every month (every fortnight in summer), remove battery from pressed steel container, clean terminals, and top-up the three cells to $\frac{1}{8}$" above the level of the plates with distilled water — NOT tap water, as this contains impurities detrimental to the battery. Pour the distilled water through a glass funnel or syringe.

Many lighting troubles can be traced to unseen corrosion between the surfaces of the battery terminals ; the positive is earthed to reduce this effect to a minimum, but keep the terminals clean. A little grease smeared on them will help prevent corrosion.

Do not keep distilled water in receptacles made of any kind of metal as this will quickly render it impure — make use of a clean glass bottle or jar. Rainwater collected in a jar makes a satisfactory substitute for distilled water.

NEVER bring a naked light near a battery with vent plugs removed or when the battery is being charged ; the gas given off by the electrolyte is dangerously explosive.

Battery acid is highly corrosive ; therefore throw away any cleaning rags used to clean the battery lest their use on other parts of the machine causes rust.

NEVER let a battery completely run down ; if this does occur, get it charged as soon as possible, or its length of life may be seriously shortened.

HEADLAMP.

The switch panel is retained by four screws and supports the wiring harness. The main bulb has twin filaments, one filament providing the main driving beam and the other a dipped beam, brought into operation by the dipper switch on the left handlebar, when required. The pilot bulb is mounted behind the reflector and shines through a small window in the reflector under the main bulb.

The design of the lamp holder, lamp and reflector assembly is such that when the bulb is correctly positioned, no focussing is required.

The reflector and front glass are made up as one assembly and no attempt should be made to separate them. The components cannot be purchased separately.

REMOVING LIGHT UNIT AND HEADLAMP RIM.

Slacken the screw on top of the lamp body at the front, pull the rim outward from the top and, as the front comes away, lower slightly to disengage bottom tag from lamp shell. Twist the back shell in an anti-clockwise direction and pull it off. The main bulb can then be removed from its housing in the reflector assembly. The lamp rim is secured to the light unit by spring clips which can be removed by pressing with a screwdriver blade, at the same time working away from the edge.

REPLACING RIM AND LIGHT UNIT.

Lay the light unit in the rim so that the location block on the unit engages with the forked brackets on the rim. Replace the clips by springing in, so that they are evenly spaced around the rim. To replace the back shell, engage the projections on the inside of the back shell with the slots in the holder, press on and secure by twisting it to the right. Engage bottom tag on headlamp rim with the small slit in the shell, and gently force the top of the rim back into the shell, after which re-tighten the locking screw on top of the lamp body.

https://www.motomanuals.net/

CLUTCH AND PRIMARY DRIVE

The drive from the engine to the four plate clutch is by a pre-stretched endless chain running in the oil bath chaincase. No attention is necessary beyond that of lubrication, and occasional adjustment for push rod clearance to prevent clutch slip.

CLUTCH ADJUSTMENT

Whilst the clutch is engaged, i.e., driving, there must be clearance between end of push rod located in the hollow gearbox mainshaft, and the clutch lever fitted to gearbox end cover. An adjuster with a slotted end is provided and this can be reached with a screwdriver through a hole in the outer casing R.H. An adjuster is also provided for the inner clutch control cable. This is screwed into a lug of the gearbox casing in line with the bottom end of the clutch lever. To adjust the clutch control proceed as follows : First slacken off the bottom cable adjuster, and then position with a screwdriver the push rod adjuster until there is about $\frac{1}{16}$" of free movement at the bottom end of the clutch lever. Now take up any slack in the control cable, still leaving the free movement of the clutch lever before commencing to depress the clutch spring. Finally, tighten the adjuster locknut after making sure that there is no end pressure on the push rod whilst the clutch is engaged. Although the clutch runs in oil the corks will in time become worn on the driving faces, and it will be necessary from time to time to make use of the push rod adjuster to maintain the $\frac{1}{16}$" movement previously referred to. Eventually, and after a considerable mileage has been covered, re-corking of the clutch plates will become necessary. Special equipment is required for the fitting and subsequent grinding of the corks, and we advise owners to take advantage of our Exchange Scheme. Prices available on application to Service Department.

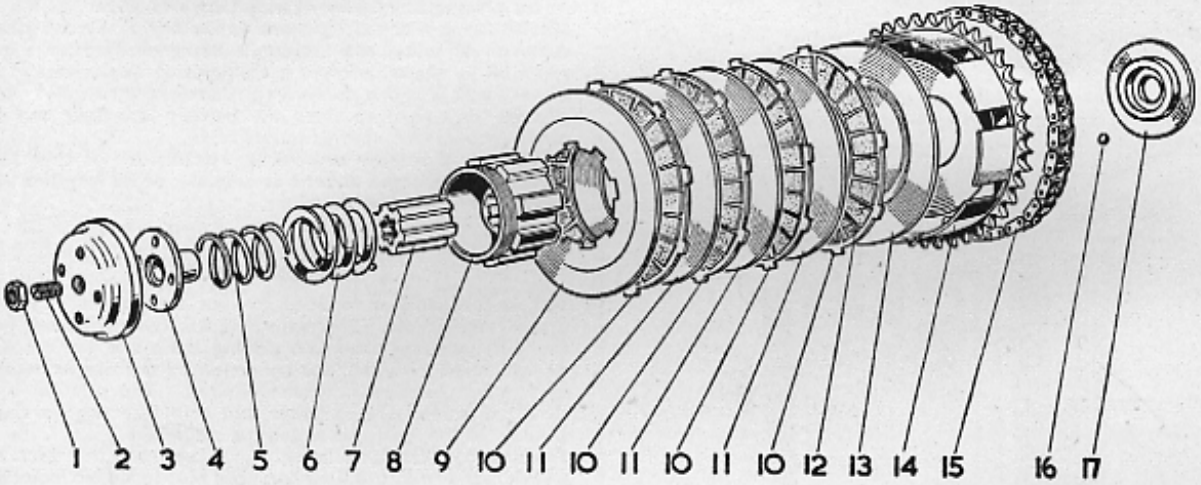

CLUTCH ASSEMBLY

1. Internal clutch adjuster lock nut.
2. Clutch adjuster screw internal.
3. Clutch cap nut.
4. Clutch centre nut.
5. Clutch inner spring.
6. Clutch spring.
7. Clutch hub.
8. Clutch sliding sleeve.
9. Clutch pressure plate.
10. Clutch driving plate.
11. Clutch intermediate plate.
12. Clutch corks.
13. Clutch back plate.
14. Clutch chainwheel assembly.
15. P.D. chain.
16. Balls for roller track.
17. Clutch chainwheel ball track.

DISMANTLING THE CLUTCH

Access to the clutch is obtained after the removal of the aluminium engine cover on the left-hand side, retained by five countersunk headed screws.

To remove, first take away the centre stud, which is in fact the thrust button for the push rod. Then using the centre hole for extractor purposes, make up an ordinary flat strip having two bolts to locate in two of the centre holes and turn the outer cap anti-clockwise. With the same tool now unscrew the centre, bearing in mind that this will be under spring pressure. With the centre removed the two springs inside can then be withdrawn. All clutch components can afterwards be taken apart, their removal being self explanatory. It is only necessary to point out that the clutch sprocket is mounted on a built up ballrace of $\frac{3}{16}$" diameter steel balls. Care should, therefore, be taken to catch these balls when the clutch sprocket collapses. With all clutch parts removed this gives access after the removal of the slipper type chain tensioning device to the further removal of the chain case inner which is located by two screws and three nuts.

FINAL DRIVE SPROCKET

Removal of the left-hand engine cover, clutch and chaincase inner cover will reveal the final drive sprocket. The engine need not be removed from the frame merely to replace this when the need arises. For this purpose, therefore, it is well to leave the rear chain round the two sprockets, position the gear lever in top and then screw the brake rod adjuster hard on. Next remove the grub screw outside the locking ring and then by means of a substantial ring spanner for preference, otherwise an adjustable spanner, remove the locking nut by means of its right-hand thread. The chain can now be detached and the final drive sprocket can be withdrawn along the splines of the high gear sleeve.

https://www.motomanuals.net/

TRANSMISSION

A chain is an assembly of links with rollers connected together by outer link plates and held together by rivets. If it is kept clean, adequately lubricated and correctly adjusted, a chain will give little trouble and will wear out long before breaking point is reached.
The front chain is fully enclosed in an oil bath and consequently wear will be negligible over a long period. The rear chain, being exposed and more heavily loaded is more likely to give trouble through neglect and should be regularly checked for tension and frequently lubricated.

ADJUSTMENT OF PRIMARY CHAIN

Excessive slack in the primary chain will become audible, but in any case it is advisable to check its tension after 1,000 miles and every subsequent 3,000 miles. The accompanying drawing shows how the chain is adjusted. The alloy chain-case cover (left-hand side) is held by five countersunk screws and a pan should be placed underneath to receive the oil when the cover is removed. Due to the application of jointing compound to the washer, there will be a little resistance and care must be taken to prevent distortion of the cover when removing it. Adjustment of the chain is effected by loosening nuts 8 and 4 after which the tensioner may be raised in its slot until excessive slack is taken up. There should be $\frac{1}{4}$" up and down play in the top run of the chain. Clean paper washer with petrol and seal up with jointing compound.

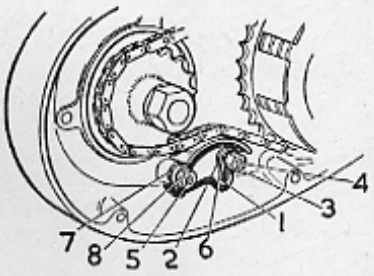

1. Chain tensioner.
2. $\frac{5}{16}$" flat washer.
3. Hex. nut.
4. Adjuster stud.
5. Pivot stud.
6. $\frac{5}{16}$" spring washer.
7. Plain washer.
8. Hex. nut.

ADJUSTMENT OF REAR CHAIN

The rear chain will probably require adjusting after completion of the first 200 miles (320 kms.) owing to stretch which occurs with all new chains. When machine is on the stand there should be between 1" and $1\frac{1}{2}$" slack in the bottom run of the chain. This will settle to $\frac{3}{4}$"—$\frac{1}{2}$" when rider is seated on the machine. To adjust rear chain, slacken spindle nuts and brake adjuster, and turn the two adjusters an equal number of turns to keep the wheel in alignment. Always check wheel alignment with a stretched string or straight board after adjusting the chain. The taut string or board should touch both sides of the wheel centres with the front wheel pointing dead ahead. Check adjustment in various positions by rotating the wheel a little. This is necessary because there is always one spot tighter than the rest. After adjusting, do not forget to tighten the spindle nuts. Re-adjust knurled nut on the brake rod to obtain the correct tension.
Never drive with the chain too tight — this will ruin the gearbox main bearing very rapidly.

CLEANING AND LUBRICATING THE CHAIN

A chain cannot be cleaned merely by drenching with oil while in position on the machine. The best way to do the job is as follows :
Remove spring clip and connecting link and take chain off the sprockets. Soak in a bath of paraffin using a stiff brush to remove all external dirt and allow paraffin to run through the joints of the chain. All grit and dirt between the joints must be removed. Swill in clean paraffin and hang over a pan to allow it to drain.
Immerse chain in a tin containing graphited grease that has been heated until fluid over a pan of boiling water. Move the chain about in the grease until grease has cooled off to normal semi-solid state. Remove chain from grease and wipe off surplus.
NOTE.—When replacing chain, see that the spring clip faces in direction of drive, i.e., closed end of link should face forwards on top run of chain.

ALTERATIONS TO LENGTH OF REAR CHAIN

If chain has an even number of pitches, that is, a cranked link is not used in the chain, remove the rivets holding the second pair of outer link plates (see A) which will shorten the chain by four rollers and two pairs of outer link plates. Replace with a cranked double link and single connecting link (B).

If chain has an odd number of pitches, remove rivets holding the second pair of outer links (see A) (first pair will be cranked) and replace with single connecting link and inner link (B).

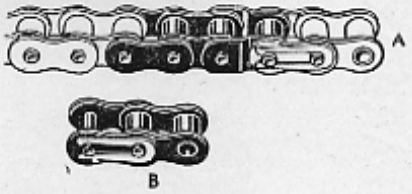

CHAIN COMPONENTS

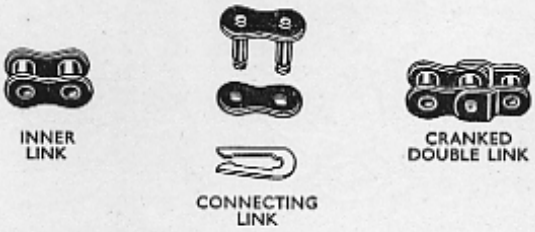

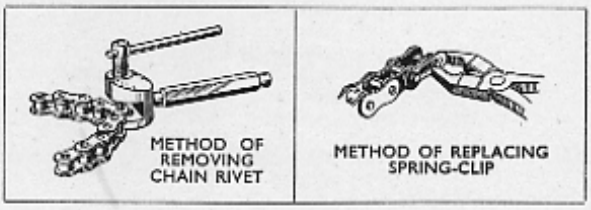

FITTING A NEW REAR CHAIN

To simplify the task of fitting a new rear chain, disconnect the old chain at the rear wheel sprocket by removing the single connecting spring link. Connect old chain to new chain, when by pulling the bottom run of the old chain, the new one can easily be carried round the gearbox sprocket, whereupon the old chain is disconnected and the ends of the new one connected together. Care should be taken when fitting a new chain to keep it from contact with the floor or any place where it is likely to collect grit, etc.

https://www.motomanuals.net/

GEARBOX

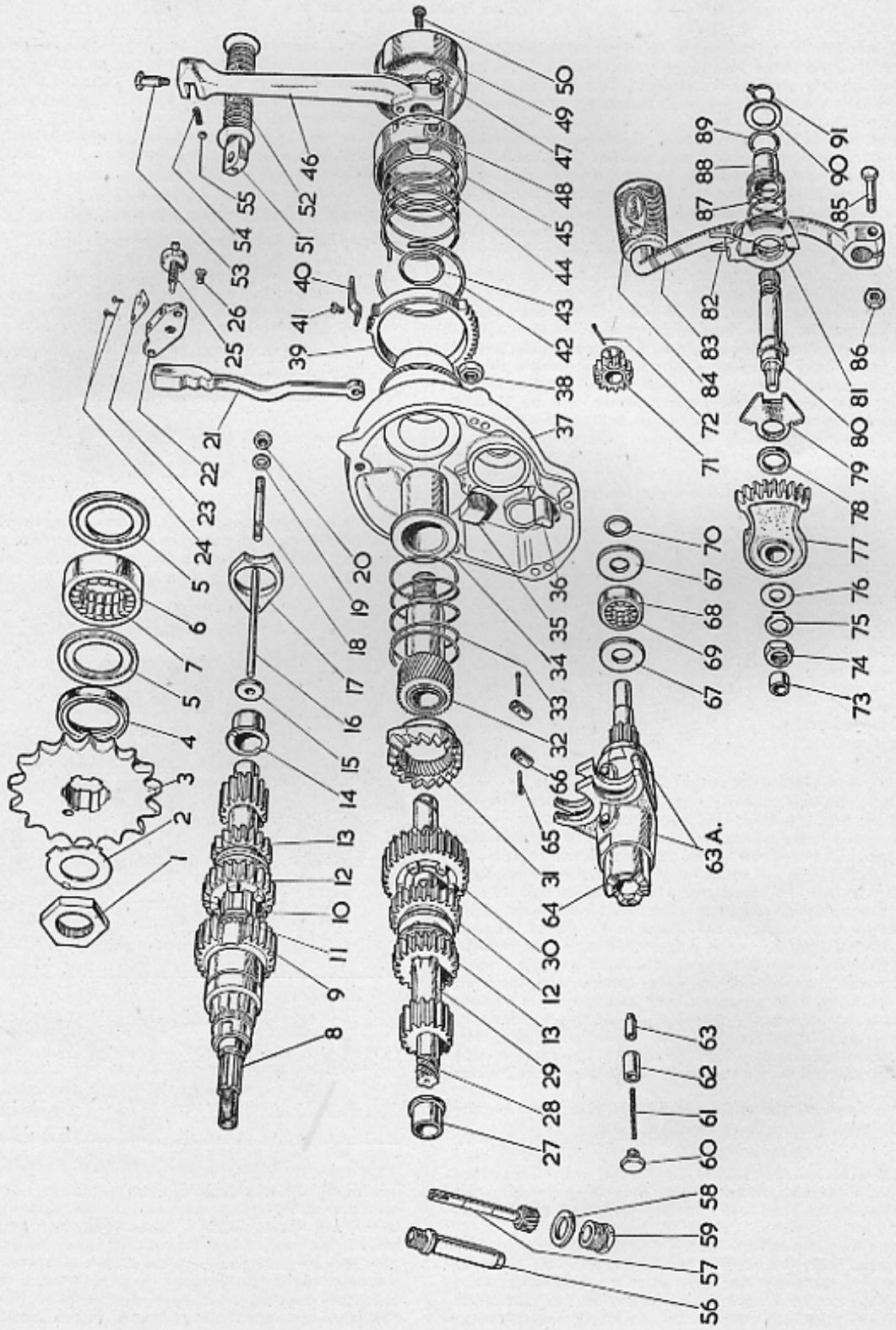

https://www.motomanuals.net/

GEARBOX

The four-speed gearbox is a separate light alloy component bolted up to the back of the crankcase as will be seen from the exploded diagrams in this booklet. Internal ratios are 1 : 1, 1·32 : 1, 1·9 : 1 and 3·06 : 1. The layshaft and the kick starter end of the mainshaft run in plain bronze bushes and the sleeve pinion is supported by a double row $\frac{1}{4}$" x $\frac{1}{4}$" roller bearing. Gear selection is by means of fork arm members located in the splined sliding layshaft pinions, the movement being governed by a quadrant and profile cam member. The kick starter mechanism employs face ratchets brought into engagement by the rotation of the helical splined kick starter shaft.

Upon removal of the L.H. crankcase extension, clutch and chaincase inner cover, it will be obvious that the gearbox is a separate unit attached to the crankcase assembly by two nuts on each side. With the power unit removed from the frame, the gearbox can be separated from the crankcase if required.

KICK STARTER CRANK

The cover over the boss of the kick starter crank is merely a dust excluder. Removal of the centre screw will give access to an ordinary clamp bolt and nut. The return spring itself is retained by two right-angle bends alone and is not bolted otherwise.

GEARBOX END COVER

The right-hand aluminium engine cover can be removed with the contact breaker in position merely by taking away the three outer screws from the cover recesses. This then gives access to the gearbox end cover. The segment and pinion visible are merely gear position indicators, there is no need to take away the segment at all and the pinion can be removed by merely withdrawing the split pin, after which the outer cover can be taken away by removal of the five countersunk headed screws. Further dismantling of the gearbox internals will then be easy to follow, particularly if reference is made to the illustration on page 26.

Clutch thrust is taken up by ball bearings positioned between the high gear sleeve and abutting to a special washer making contact with the end of the splined shaft.

The speedometer drive is taken from the end of the layshaft.

The selector shaft assembly can be removed as a unit without any need to dismantle it. The assembly, incidentally, is mounted on two rows of $\frac{3}{16}$" x $\frac{3}{16}$" diameter rollers.

Foot-change mechanism can be removed as a sub-assembly after taking away the circlip from the outside of the operator shaft.

GEARBOX LUBRICATION

Oil capacity of gearbox is approximately 1·2 pints. The level should be maintained to the notch cut in the dipstick fitted to the filler plug on R.H. of crankcase, when resting on the casing and not screwed down.

GEARBOX COMPONENTS

1. Final drive sprocket nut.
2. Final drive sprocket lockwasher.
3. Final drive sprocket.
4. Gearbox oil seal.
5. Thrust washer for mainshaft bearing.
6. Mainshaft bearing outer race.
7. Rollers for mainshaft bearing.
8. Mainshaft, crown-wheel intergral pinion.
9. High gear pinion, 27 teeth.
10. Mainshaft pressure washer.
11. Ball for high gear thrust race.
12. Sliding gear with dogs, 24 teeth.
13. Sliding gear without dogs, 20 teeth.
14. Mainshaft bush.
15. Mainshaft rubber washer.
16. Clutch push rods.
—. Roller for clutch.
17. Kickstarter ratchet stop.
18. Kickstarter stop/clutch bridge stud.
19. Washer for clutch bridge stud.
20. Nut for clutch bridge stud.
21. Clutch lever.
22. Clutch bridge.
23. Clutch adjuster locking plate.
24. Locking plate screws.
25. Clutch adjusting screw assembly, external.
26. Clutch bridge screw.
27. Layshaft bush.
28. Worm gear for speedometer drive.
29. Layshaft crown-wheel internal pinion.
30. Kickstarter ratchet pinion, 29 teeth.
31. Kickstarter ratchet.
32. Kickstarter shaft.
33. Kickstarter ratchet spring.
34. Kickstarter housing bush.
35. Stop for gear change return spring.
36. Stop pin.
37. Gearbox end cover.
38. Gear change spring retainer nut.
39. Ring for gear indicator.
40. Pointer for gear indicator.
41. Screw for gear indicator pointer.
42. Circlip for gear indicator.
43. Kickstart shaft " O " ring.
44. Kickstart return spring.
45. Kickstart spring cover.
46. Kickstart lever.
47. Kickstart lever bolt.
48. Kickstart lever bolt nut.
49. Cover for kickstart spring cap.
50. Screw for kickstart spring cap.
51. Kickstart pedal.
52. Kickstart lever rubber.
53. Kickstart pedal pivot pin.
54. Kickstart pedal spring.
55. Ball for spring.
56. Bush for speedometer drive.
57. Worm wheel for speedometer drive.
58. Speedo drive plug washer.
59. Plug for speedometer housing.
60. End plug for plunger.
61. Plunger spring.
62. Plunger bush.
63. Plunger for cam.
63A. Sliding gear fork.
64. Cam barrel.
—. Thrust washer for cam barrel.
65. Split pin for sliding gear fork guide peg.
—. Bearing pin for cam barrel.
66. Guide peg for sliding gear fork.
67. Thrust washers for cam bearing.
68. Cam barrel bearing outer race.
69. Rollers for cam barrel bearing.
70. Cam barrel " O " ring.
71. Pinion for cam barrel (gear indicator).
72. Split pin for gear indicator pinion.
73. Operating spindle bush gearbox body.
74. Operating spindle nut.
75. Operating spindle lock washer.
76. Operating spindle shim.
77. Quandrant for gear operation.
78. Distance piece.
79. Operating spindle plate.
80. Operating spindle.
81. Operating pawl.
82. Operating pawl spring.
83. Gear change lever.
84. Foot change gear lever rubber.
85. Gear change gear bolt.
86. Gear change gear bolt nut.
87. Gear change ratchet spring.
88. Operating spindle bush gearbox end plate.
89. Gear change " O " ring.
90. Operating spindle washer.
91. Operating spindle circlip.

https://www.motomanuals.net/

CARBURETTER

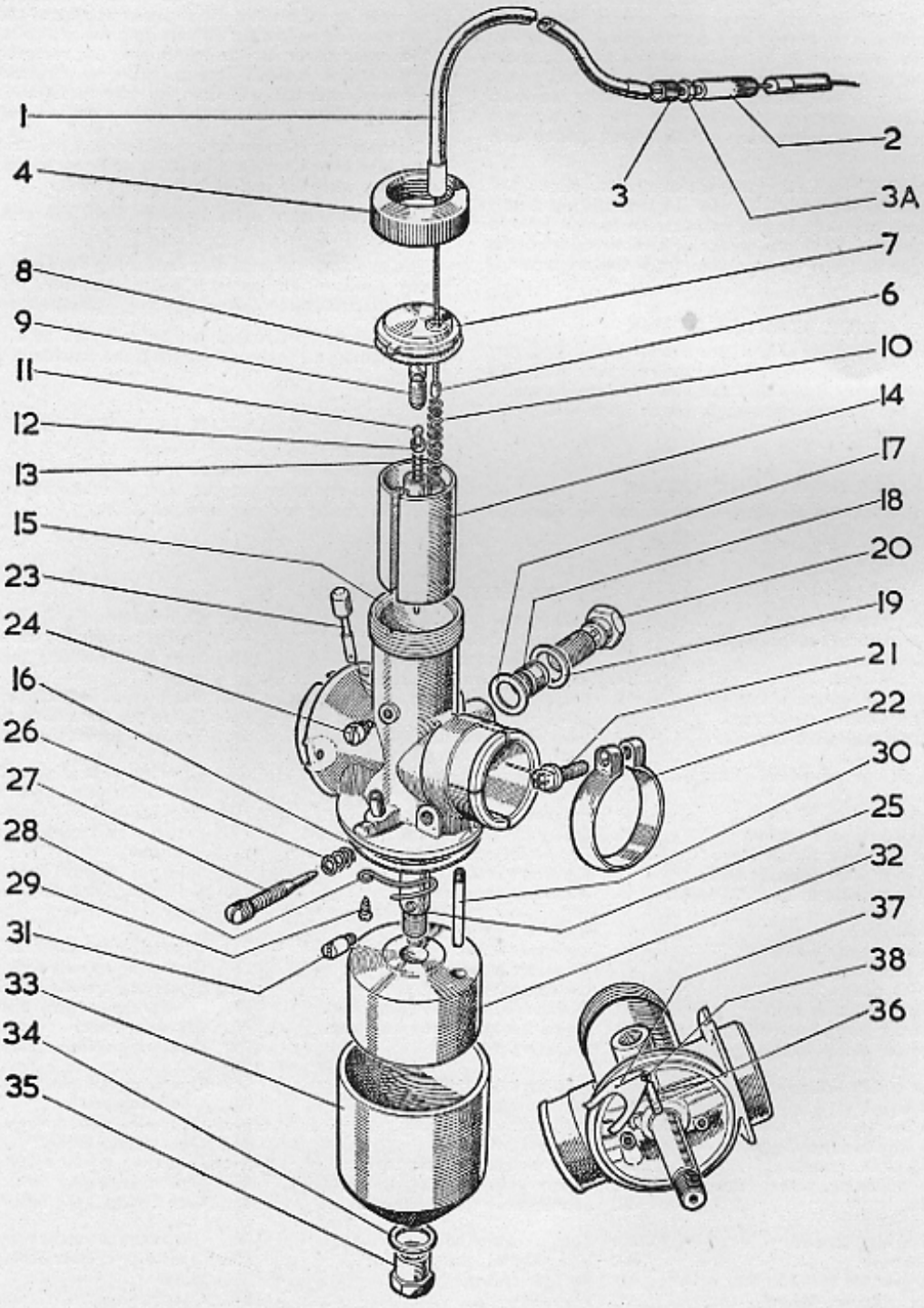

https://www.motomanuals.net/

CARBURETTER

1. Throttle cable.
2. Middle cable adjusting sleeve.
3. Middle cable adjusting screw.
3A. Middle cable adjusting nuts.
4. Top ring.
6. Cable nipple.
7. Top disc.
8. Top disc fibre washer.
9. Needle adjusting screw.
10. Throttle spring.
11. Needle.
12. Needle collar.
13. Needle spring.
14. Throttle.
15. Carburetter body.
16. Float cup fibre washer.
17. Banjo fibre washer — small hole.
18. Petrol filter.
19. Banjo fibre washer — large hole.
20. Banjo bolt.
21. Body clip screw.
22. Body clip.
23. Tickler.
24. Guide screw (throttle).
25. Centre-piece.
—. Spring for pilot needle.
27. Pilot jet needle.
28. Tickler spring.
29. Screw for tickler spring.
30. Pilot jet.
31. Main jet.
32. Float.
33. Float cup.
34. Bottom nut fibre washer.
35. Bottom nut.
36. Fuel needle.
37. Fuel needle lever.
38. Fuel needle lever pin.

The carburetter fitted to the K12 Colonel is the Villiers type S.25.

All air passing through the carburetter is filtered, thus preventing particles of foreign matter reaching the engine.

During bench testing at the works the carburetter is carefully set and normally it will not be necessary to alter the setting until a considerable mileage has been completed.

Means are, however, provided for adjustments to suit individual requirements, and before these can be made, the carburetter cover aluminium casting, has to be removed.

The carburetter cover is retained by a knurled screw at the rear. Minor adjustments can be undertaken by sliding the cover up the throttle cable and petrol pipe, but if the carburetter cover and carburetter are to be removed completely, the fuel pipe should be pulled off the fuel cock union. With the cover raised, it is an easy matter to unscrew the carburetter top ring and disconnect the throttle cable.

OPERATION OF CARBURETTER

The handlebar twistgrip operates the throttle slide and thereby regulates the amount of mixture entering the engine, whilst the carburetter itself automatically meters and atomises the correct amount of fuel to give the necessary mixture strength. To achieve this automatic control of the mixture strength, two separate fuel systems are fitted, namely the main-jet and pilot-jet systems. At idling speeds the carburetter draws fuel from the pilot-jet and, as the throttle is gradually opened, the fuel is then drawn in turn from the pilot " progression " hole and the main-jet system. The operation of the two systems is given below :

1. (a) Pilot-Jet System

At idling speeds, when the throttle is nearly closed, the pilot outlet hole (A) is subject to the very high engine suction, and petrol is, therefore, drawn from the float chamber through the pilot tube (B), and the pilot outlet hole.

The calibrated pilot-jet is contained in the top of the pilot tube. At the same time, a filtered supply of air is drawn from the mouth of the carburetter through passage C, through the variable air-jet D, and is then pre-mixed with the fuel in the small chamber E. The pilot adjuster screw F varies the size of the pilot air jet, and therefore, the pilot mixture strength — to richen mixture, turn screw clockwise.

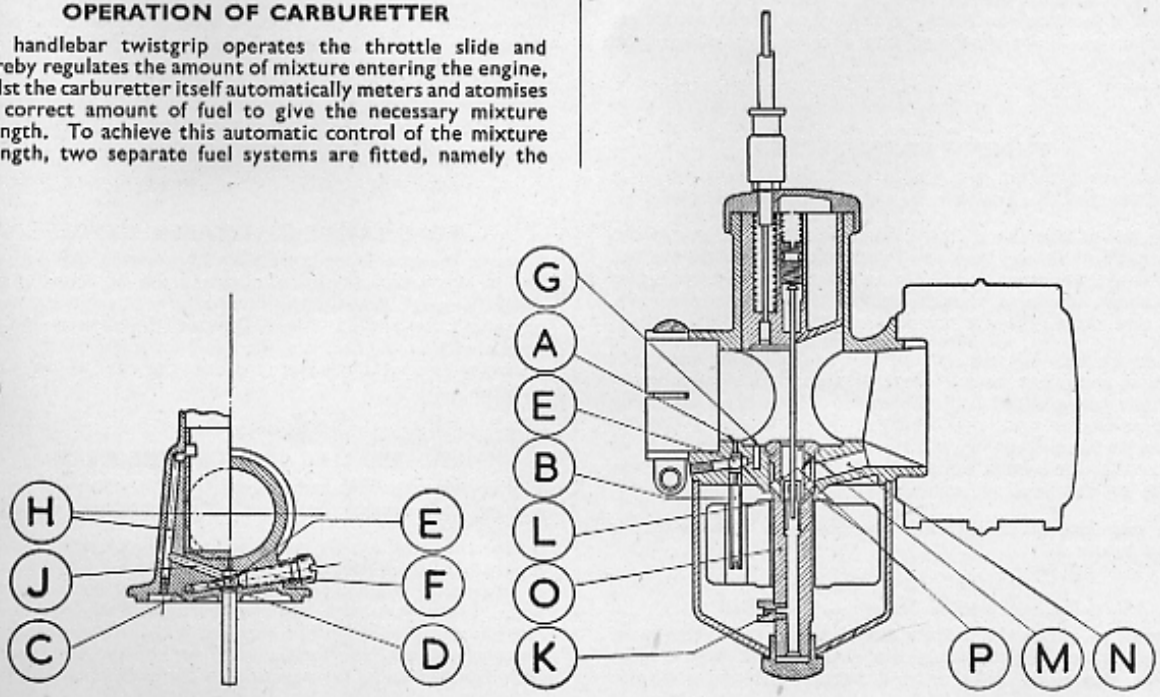

https://www.motomanuals.net/

When the throttle slide is opened a small amount beyond that required for idling, the suction on the pilot outlet hole is reduced, but at the same time, the suction on the pilot "progression" hole (G) increases. A further supply of petrol is, therefore, drawn through the "progression" hole, and prevents the weak spot which would otherwise occur due to the fall off in supply from the pilot hole before the main-jet comes into full operation.

It follows from the preceding remarks that whenever the throttle is shut off whilst the engine speed is high (such as on long downhill sections), the pilot system is subject to the full engine suction, and petrol will flow into the engine from the pilot outlet hole. As the engine is not firing under these conditions, this fuel supply will tend to build up in the crankcase and cylinder and cause severe "four-stroking" or "eight-stroking" when the throttle is opened again. To overcome this fault, an automatic air bleed to the pilot has been incorporated, which relies upon the matching of two slots, one in the throttle slide and the other in the carburetter body.

When the throttle slide is shut, these two slots line up and air can flow from the front of the carburetter through the throttle slide and down passages H and J into the pilot system. The high depression on the pilot system is then destroyed. At all other throttle positions, the two slots do not line up, and no air can pass to the pilot system through these passages.

1. (b) Main-Jet System

As the throttle slide is opened further beyond the idling and progression positions, the engine suction has its effect upon the main-jet system, and petrol is drawn from the float chamber through the calibrated main jet (K) and the needle-jet (L) and into the small pre-mixing chamber M. There the petrol is atomised by the filtered secondary air which is drawn from the mouth of the carburetter along passage N, and which enters the centre-piece (O) through four small holes (P). The rich petrol-air mixture then flows from the pre-mixing chamber into the main mixing chamber, where it meets the main airstream. The effective size of the needle-jet (L) depends upon the throttle slide position (as the taper needle is fixed to the slide), and the sizes of the needle-jet and the needle are chosen to give correct carburation over the range.

TUNING CARBURETTER

Before any attempt is made to tune the carburetter it is essential that the engine is in a good mechanical condition.

This means that there should be no air leaks at any of the joints, there should be a good spark at the plug points and also that there is no restriction in the fuel supply. It is also important, of course, that the carburetter is clean internally, and that the air filter is not obstructed.

There are four adjustments for tuning the carburetter, but each of these has its full effect at a particular part of the throttle range, and should, therefore, only be used for tuning that particular part of the range. There is also a definite sequence for the tuning, and this also must be adhered to in order that the results achieved with one adjustment are not upset by the next adjustment.

The sequence of tuning with the necessary adjustments is given below :

(1) Main-Jet. Throttle Range — ¾ to Full

In order to obtain the correct main-jet size, the engine must be tested at full throttle in top gear. If the engine lacks power, detonates badly or runs better with the strangler slightly closed, a larger main-jet is required. Should the engine "four-stroke" or improve momentarily after the petrol has been switched off, a smaller jet is required. After de-clutching and stopping the engine quickly the sparking plug should have a shiny black appearance if the correct main-jet is fitted. As an additional guide the engine should tend to "four-stroke" at full throttle in bottom gear on level ground (or high engine speeds in neutral), but not in any higher gears.

(2) Pilot-Jet. Throttle Range — Closed to ⅛ open

The pilot-jet must be set when the machine is stationary with the engine running at the required idling speed. To richen mixture, screw in the pilot adjuster screw, and to weaken, unscrew pilot adjuster. The mixture strength must be set as weak as possible consistent with a steady reliable idling speed and good engine acceleration from this throttle position. If the mixture strength is set too rich, trouble will be experienced with the fuel build-up in the crankcase when the throttle is shut with the engine still running fast.

Should this latter fault be present after adjusting the pilot, unscrew pilot a further half a turn. Any weakness on acceleration can be cured by throttle cut-away as given below:

(3) Throttle Cut-Away. Throttle Range — ⅛ to ¼ open

The throttle slide is made with a cut-away on the carburetter inlet side which influences the depression on the main-jet system. The throttles are marked with a number which represents, in sixteenths of an inch, the amount of cut-away.

A throttle with more cut-away will give weaker mixtures (over the particular throttle range) and vice-versa. If the acceleration is weak, fit throttle with smaller cut-away, e.g. change from 3½ to 3. Should the engine tend to "four-stroke" when the throttle is shut, fit larger cut-away.

(4) Needle Adjustment. Throttle Range — ¼ to ¾ open

The needle is adjusted by the grub screw in the top of the throttle — screw down to weaken mixture, and vice-versa. The needle controls the mixture strength over most of the "cruising range" and must be correct for good fuel consumptions and acceleration.

After carrying out the above adjustments, it is wise to go back and re-check the pilot adjustment to see that this has not been affected by other adjustments.

TO CHANGE THE TAPER NEEDLE

Remove throttle from body after unscrewing the top ring, and in the centre at top of throttle will be found a small slotted screw. This is the adjuster referred to in the previous paragraph, and when this is removed by unscrewing, the needle with spring can be pushed up from underneath. When replacing the needle make sure that the needle collar is in position.

TO REMOVE THE CENTRE-PIECE

It is necessary to first remove the throttle, then the bottom nut and fibre washer, holding the float chamber in position.

Before the float can be removed it is necessary to unscrew the main-jet from the side of the centre-piece. After removal of float do not disturb the pilot-jet tube fixed to underside of body. The centre-piece can now be pushed up from underneath and out through the throttle bore. Having removed the centre-piece, the forked lever on the underside of the body can be swung on one side to allow the fuel needle to

https://www.motomanuals.net/

drop out. Do not alter the shape of the fuel needle lever as this component governs the height of the petrol in the float chamber. Should, however, the lever be damaged, it should be re-set to give a distance of $\frac{5}{16}$" between the top of float and underside of body when the fuel needle is fully raised.

TO RE-ASSEMBLE CARBURETTER

Clean the various components and make sure that the tickler vent hole is clear. Insert the centre-piece making sure that the forked fuel needle lever and fuel needle are in position.

Place float in position and replace main-jet in side of centre-piece. Clean out the float cup and replace with large fibre joint washer at top. Replace bottom nut and fibre washer, but do not use too much force, otherwise there is the danger of stripping the thread of centre-piece. Replace throttle in body at the same time guiding the taper needle into hole in top of centre-piece. A guide screw in the carburetter body will prevent the throttle being replaced unless it is correctly positioned. Locate top disc in top of body and screw on top ring. If the carburetter has been removed from the engine, make sure when refitting that the body is pushed on to the manifold as far as possible. There are four narrow slots in the body to allow the securing clip to function, and if the manifold stub does not extend past the end of the slots, air will be sucked in causing hard starting and erratic running.

The carburetter has a banjo petrol pipe fitting inside of which is a fine mesh filter gauge which should be periodically cleaned by dipping in petrol. Be sure that when replacing the petrol pipe the fibre washers make a petrol tight joint, otherwise fuel will be wasted.

The carburetter air filter should be periodically cleaned. The filter is retained in the carburetter cover by means of a metal plate and circlip. When these have been removed the filter can be taken out and dipped in petrol.

TWIST GRIP ADJUSTMENT

Adjustment of the spring tension on the twist grip sleeve is effected by means of a screw and locknut in the bottom half of the twist grip casting. To increase tension turn the screw clockwise and tighten locknut.

The twist grip should not be adjusted so that it is difficult to turn as this will probably result in an aching wrist. Adjustment should be such that the grip is easy to operate but remains in position when the hand is removed for signalling, etc.

CARBURETTER CABLE ADJUSTMENT

A certain amount of slack may develop in the throttle cable after a time ; this can be taken up by means of the adjuster on the carburetter throttle cable.

TRACING FAULTS

SEQUENCE OF TESTING	POSSIBLE TROUBLE	REMEDY
ENGINE WILL NOT START		
Depress tickler on carburetter to check whether fuel is reaching carburetter.	No fuel reaching carburetter, air lock in petrol pipe.	Turn tap to ON, refill tank, clear air vent in filler cap. Turn on reserve tap where fitted.
If no fuel, even when tap is on and fuel is in tank.	Choked petrol pipe, filter on tap, filter in banjo. Fuel needle sticking in seating.	Remove and clean out. Dismantle carburetter and fit new needle.
Test for spark by holding sparking plug body on cylinder head.	Leak along insulation of plug or high tension lead.	Try a new plug of the type recommended and/or new H.T. lead.
If still no spark : Test for spark at end of H.T. lead held $\frac{1}{8}$" from cylinder fins.	Plug points may be oily or sooted up. If no spark at end of H.T. lead, contact breaker point gap may be too narrow, or points pitted or dirty or oily.	Clean plug or fit new one. Adjust contact breaker point gap to ·015". Clean.
	Moisture on insulation of condenser.	Clean and dry out.
	High tension terminal not making good contact on ignition coil.	Clean and correct.
	Cracked insulation of adjustable contact breaker point.	Replace.
	Damaged insulating sleeving on wires connecting contact breaker to coil or condenser.	Replace with new sleeving.
	Faulty connection to low tension wire of ignition coil.	Correct.
	Faulty condenser.	Replace.
	Faulty ignition coil.	Replace.

https://www.motomanuals.net/

FAULT FINDING CHART — continued

SEQUENCE OF TESTING	POSSIBLE TROUBLE	REMEDY
ENGINE WILL NOT START		
If above tests are satisfactory but engine will not start.	Mixture may be too rich due to use of strangler, or incorrect setting of taper needle.	Open throttle wide and depress kick-starter several times to clear engine of petroil, adjust taper needle, drain crank-case.
	Air leaks at carburetter stub or manifold joint causing weak mixture.	Correct.
	Incorrect ignition timing.	Check, following instructions given.
ENGINE FOUR OR EIGHT STROKES		
Strangler may not be fully open or taper needle in a too high position. Air filter may need cleaning.	Mixture too rich.	Lower taper needle by moving to a WEAKER position. Lower needle by adjuster screw fitted in throttle.
Check by watching for excessive smoke from exhaust pipe or silencer.	Engine may four stroke for a little while after standing due to accumulation of oil in crankcase.	Usually ceases when engine has been running for a few minutes unless too much oil has been mixed with the petrol.
	Flooding of carburetter.	Persistent flooding is usually due to dirt under fuel needle seating, or sticking fuel needle, damaged seating or punc-tured float.
ENGINE LACKS POWER	Engine out of tune, bearings worn. Unsuitable sparking plug. Loss of compression.	Overhaul. Replace with recommended type. Tighten cylinder head bolts. Replace worn piston rings.
	Incorrect " petroil " mixture.	Correct mixture is 1 part oil, 20 parts petrol.
	Excessive carbon deposit on piston crown and cylinder head.	Decarbonise.
	Exhaust system choked with carbon.	Clean out silencer and exhaust pipes.
	Incorrect carburetter setting.	Check and adjust.
	Air cleaner choked.	Wash in petrol, drain and dip in thin oil.
	Obstruction in fuel supply.	Clean out tap, fuel pipe and filters.
	Incorrect ignition timing.	Check and adjust.
	Brakes binding.	Adjust.
	Driving chains too tight.	Adjust.
ENGINE WILL NOT RUN SLOWLY	Weak mixture due to air leaks at car-buretter stub or manifold joint, crank-case and cylinder base joints.	Tighten all joints.
	Crankcase drain screw loose or missing.	Tighten or replace.
	Worn crankshaft bearings or leaking seal.	Replace.
	Ignition timing too far advanced.	Correct.
ENGINE SUDDENLY STOPS FIRING	Sparking plug lead detached.	Replace and tighten nut.
	Plug points bridged by oil, carbon, or deposit caused by use of leaded petrol.	Clean or replace.
	Short circuit of high tension current by water on H.T. lead.	Dry out.

https://www.motomanuals.net/

https://www.motomanuals.net/